Features

- High-performance, Low-power *AVR* ® 8-bit Microcontroller
- RISC Architecture
  - 118 Powerful Instructions – Most Single Clock Cycle Execution
  - 32 x 8 General Purpose Working Registers
  - Fully Static Operation
  - Up to 16 MIPS Throughput at 16 MHz
- Data and Non-volatile Program Memory
  - 2K Bytes of In-System Programmable Program Memory Flash
    Endurance: 10,000 Write/Erase Cycles
  - 128 Bytes of In-System Programmable EEPROM
    Endurance: 100,000 Write/Erase Cycles
  - 128 Bytes Internal SRAM
  - Programming Lock for Flash Program and EEPROM Data Security
- Peripheral Features
  - 8-bit Timer/Counter with Separate Prescaler
  - 8-bit High-speed Timer with Separate Prescaler
    2 High Frequency PWM Outputs with Separate Output Compare Registers
    Non-overlapping Inverted PWM Output Pins
  - Universal Serial Interface with Start Condition Detector
  - 10-bit ADC
    11 Single Ended Channels
    8 Differential ADC Channels
    7 Differential ADC Channel Pairs with Programmable Gain (1x, 20x)
  - On-chip Analog Comparator
  - External Interrupt
  - Pin Change Interrupt on 11 Pins
  - Programmable Watchdog Timer with Separate On-chip Oscillator
- Special Microcontroller Features
  - Low Power Idle, Noise Reduction, and Power-down Modes
  - Power-on Reset and Programmable Brown-out Detection
  - External and Internal Interrupt Sources
  - In-System Programmable via SPI Port
  - Internal Calibrated RC Oscillator
- I/O and Packages
  - 20-lead PDIP/SOIC: 16 Programmable I/O Lines
  - 32-lead MLF: 16 programmable I/O Lines
- Operating Voltages
  - 2.7V - 5.5V for ATtiny26L
  - 4.5V - 5.5V for ATtiny26
- Speed Grades
  - 0 - 8 MHz for ATtiny26L
  - 0 - 16 MHz for ATtiny26
- Power Consumption at 1 MHz, 3V and 25°C for ATtiny26L
  - Active 16 MHz, 5V and 25°C: Typ 15 mA
  - Active 1 MHz, 3V and 25°C: 0.70 mA
  - Idle Mode 1 MHz, 3V and 25°C: 0.18 mA
  - Power-down Mode: < 1 µA

8-bit AVR® Microcontroller with 2K Bytes Flash

ATtiny26
ATtiny26L

Rev. 1477E–AVR–12/03

Pin Configuration

PDIP/SOIC

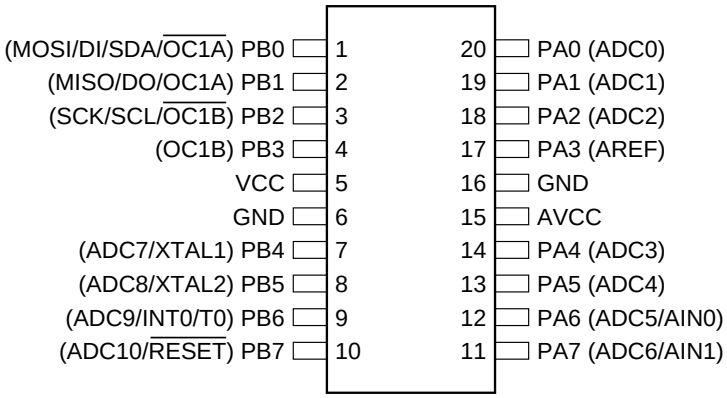

MLF Top View

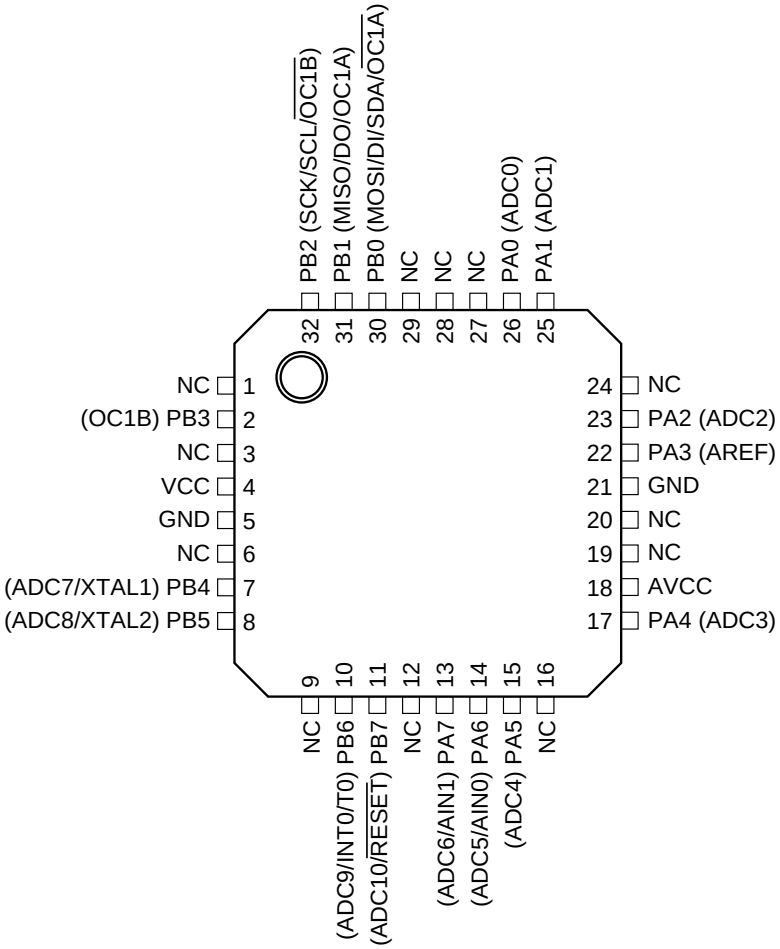

Description

The ATtiny26(L) is a low-power CMOS 8-bit microcontroller based on the *AVR* enhanced RISC architecture. By executing powerful instructions in a single clock cycle, the ATtiny26(L) achieves throughputs approaching 1 MIPS per MHz allowing the system designer to optimize power consumption versus processing speed.

The AVR core combines a rich instruction set with 32 general purpose working registers. All the 32 registers are directly connected to the Arithmetic Logic Unit (ALU), allowing two independent registers to be accessed in one single instruction executed in one clock cycle. The resulting architecture is more code efficient while achieving throughputs up to ten times faster than conventional CISC microcontrollers. The ATtiny26(L) has a high precision ADC with up to 11 single ended channels and 8 differential channels. Seven differential channels have an optional gain of 20x. Four out of the seven differential channels, which have the optional gain, can be used at the same time. The ATtiny26(L) also has a high frequency 8-bit PWM module with two independent outputs. Two of the PWM outputs have inverted non-overlapping output pins ideal for synchronous rectification. The Universal Serial Interface of the ATtiny26(L) allows efficient software implementation of TWI (Two-wire Serial Interface) or SM-bus interface. These features allow for highly integrated battery charger and lighting ballast applications, low-end thermostats, and firedetectors, among other applications.

The ATtiny26(L) provides 2K bytes of Flash, 128 bytes EEPROM, 128 bytes SRAM, up to 16 general purpose I/O lines, 32 general purpose working registers, two 8-bit Timer/Counters, one with PWM outputs, internal and external Oscillators, internal and external interrupts, programmable Watchdog Timer, 11-channel, 10-bit Analog to Digital Converter with two differential voltage input gain stages, and four software selectable power saving modes. The Idle mode stops the CPU while allowing the Timer/Counters and interrupt system to continue functioning. The ATtiny26(L) also has a dedicated ADC Noise Reduction mode for reducing the noise in ADC conversion. In this sleep mode, only the ADC is functioning. The Power-down mode saves the register contents but freezes the oscillators, disabling all other chip functions until the next interrupt or hardware reset. The Standby mode is the same as the Power-down mode, but external oscillators are enabled. The wakeup or interrupt on pin change features enable the ATtiny26(L) to be highly responsive to external events, still featuring the lowest power consumption while in the Power-down mode.

The device is manufactured using Atmel's high density non-volatile memory technology. By combining an enhanced RISC 8-bit CPU with Flash on a monolithic chip, the ATtiny26(L) is a powerful microcontroller that provides a highly flexible and cost effective solution to many embedded control applications.

The ATtiny26(L) AVR is supported with a full suite of program and system development tools including: Macro assemblers, program debugger/simulators, In-circuit emulators, and evaluation kits.

Block Diagram

Figure 1. The ATtiny26(L) Block Diagram

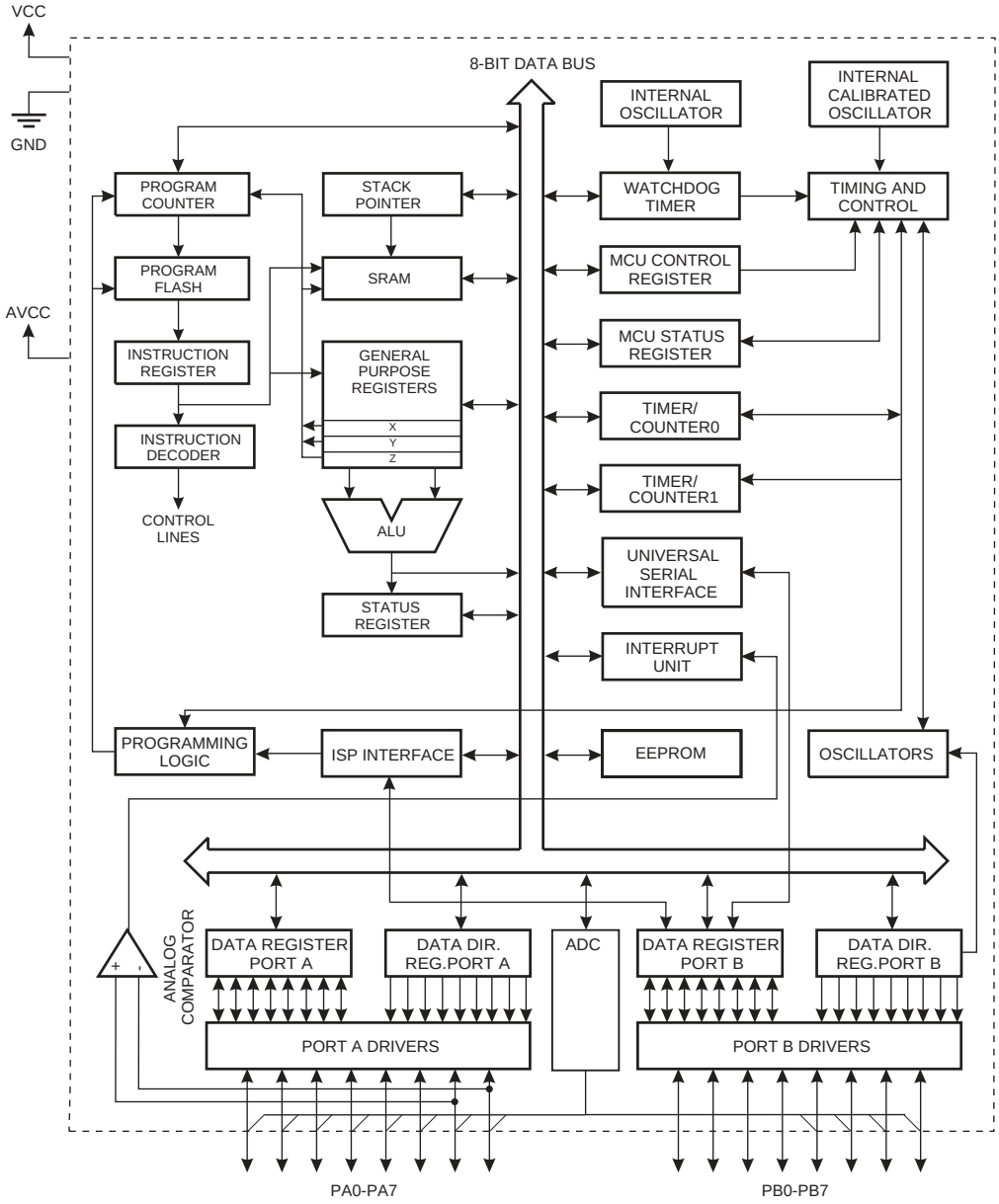

Pin Descriptions

VCC Digital supply voltage pin.

GND Digital ground pin.

AVCC AVCC is the supply voltage pin for Port A and the A/D Converter (ADC). It should be externally connected to V_{CC}, even if the ADC is not used. If the ADC is used, it should be connected to V_{CC} through a low-pass filter. See page 77 for details on operating of the ADC.

Port A (PA7..PA0) Port A is an 8-bit general purpose I/O port. PA7..PA0 are all I/O pins that can provide internal pull-ups (selected for each bit). Port A has alternate functions as analog inputs for the ADC and analog comparator and pin change interrupt as described in “Alternate Port Functions” on page 95.

Port B (PB7..PB0) Port B is an 8-bit general purpose I/O port. PB6..0 are all I/O pins that can provide internal pull-ups (selected for each bit). PB7 is an I/O pin if not used as the reset. To use pin PB7 as an I/O pin, instead of RESET pin, program (“0”) RSTDISBL Fuse. Port B has alternate functions for the ADC, clocking, timer counters, USI, SPI programming, and pin change interrupt as described in “Alternate Port Functions” on page 95.

An External Reset is generated by a low level on the PB7/$\overline{\text{RESET}}$ pin. Reset pulses longer than 50 ns will generate a reset, even if the clock is not running. Shorter pulses are not guaranteed to generate a reset.

XTAL1 Input to the inverting oscillator amplifier and input to the internal clock operating circuit.

XTAL2 Output from the inverting oscillator amplifier.

Architectural Overview

The fast-access Register File concept contains 32 x 8-bit general purpose working registers with a single clock cycle access time. This means that during one single clock cycle, one ALU (Arithmetic Logic Unit) operation is executed. Two operands are output from the Register File, the operation is executed, and the result is stored back in the Register File – in one clock cycle.

Six of the 32 registers can be used as 16-bit pointers for indirect memory access. These pointers are called the X-, Y-, and Z-pointers, and they can address the Register File and the Flash program memory.

Figure 2. The ATtiny26(L) AVR Enhanced RISC Architecture

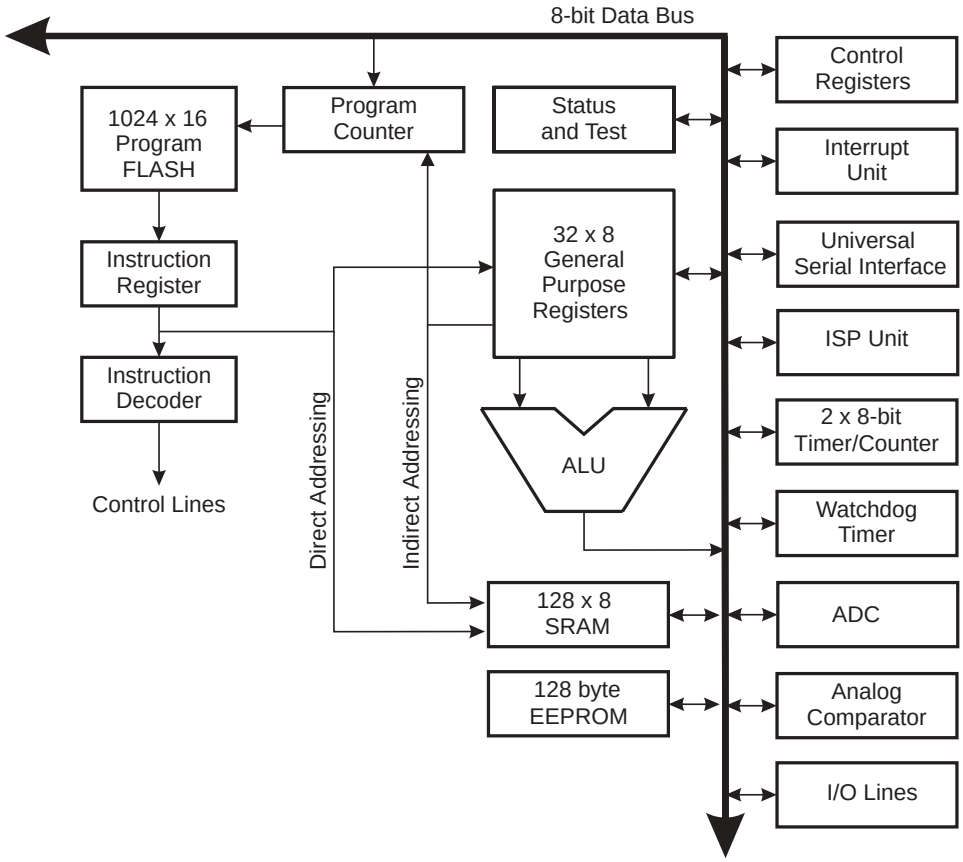

The ALU supports arithmetic and logic functions between registers or between a constant and a register. Single register operations are also executed in the ALU. Figure 2 shows the ATtiny26(L) AVR Enhanced RISC microcontroller architecture. In addition to the register operation, the conventional memory addressing modes can be used on the Register File as well. This is enabled by the fact that the Register File is assigned the 32 lowermost Data Space addresses ($00 - $1F), allowing them to be accessed as though they were ordinary memory locations.

The I/O memory space contains 64 addresses for CPU peripheral functions as Control Registers, Timer/Counters, A/D Converters, and other I/O functions. The I/O Memory can be accessed directly, or as the Data Space locations following those of the Register File, $20 - $5F.

The AVR uses a Harvard architecture concept with separate memories and buses for program and data memories. The program memory is accessed with a two stage

pipelining. While one instruction is being executed, the next instruction is pre-fetched from the program memory. This concept enables instructions to be executed in every clock cycle. The program memory is In-System programmable Flash memory.

With the relative jump and relative call instructions, the whole address space is directly accessed. All AVR instructions have a single 16-bit word format, meaning that every program memory address contains a single 16-bit instruction.

During interrupts and subroutine calls, the return address program counter (PC) is stored on the Stack. The Stack is effectively allocated in the general data SRAM, and consequently the stack size is only limited by the total SRAM size and the usage of the SRAM. All user programs must initialize the SP in the reset routine (before subroutines or interrupts are executed). The 8-bit Stack Pointer SP is read/write accessible in the I/O space. For programs written in C, the stack size must be declared in the linker file. Refer to the C user guide for more information.

The 128 bytes data SRAM can be easily accessed through the five different addressing modes supported in the AVR architecture.

The memory spaces in the AVR architecture are all linear and regular memory maps.

The I/O memory space contains 64 addresses for CPU peripheral functions as Control Registers, Timer/Counters, and other I/O functions. The memory spaces in the AVR architecture are all linear and regular memory maps.

A flexible interrupt module has its control registers in the I/O space with an additional Global Interrupt Enable bit in the Status Register. All the different interrupts have a separate Interrupt Vector in the Interrupt Vector table at the beginning of the program memory. The different interrupts have priority in accordance with their Interrupt Vector position. The lower the Interrupt Vector address, the higher the priority.

General Purpose Register File

Figure 3 shows the structure of the 32 general purpose working registers in the CPU.

Figure 3. AVR CPU General Purpose Working Registers

	7 0	Addr.	
	R0	$00	
	R1	$01	
	R2	$02	
	…		
	R13	$0D	
General	R14	$0E	
Purpose	R15	$0F	
Working	R16	$10	
Registers	R17	$11	
	…		
	R26	$1A	X-register Low Byte
	R27	$1B	X-register High Byte
	R28	$1C	Y-register Low Byte
	R29	$1D	Y-register High Byte
	R30	$1E	Z-register Low Byte
	R31	$1F	Z-register High Byte

All of the register operating instructions in the instruction set have direct and single cycle access to all registers. The only exceptions are the five constant arithmetic and logic instructions SBCI, SUBI, CPI, ANDI, and ORI between a constant and a register, and the LDI instruction for load immediate constant data. These instructions apply to the second half of the registers in the Register File – R16..R31. The general SBC, SUB, CP, AND, and OR, and all other operations between two registers or on a single register apply to the entire Register File.

As shown in Figure 3, each register is also assigned a data memory address, mapping them directly into the first 32 locations of the user Data Space. Although not being physically implemented as SRAM locations, this memory organization provides flexibility in access of the registers, as the X-, Y-, and Z-registers can be set to index any register in the file.

X-register, Y-register, and Z-register

The registers R26..R31 have some added functions to their general purpose usage. These registers are address pointers for indirect addressing of the Data Space. The three indirect address registers X, Y, and Z are defined as:

Figure 4. X-, Y-, and Z-register

In the different addressing modes, these address registers have functions as fixed displacement, automatic increment and decrement (see the descriptions for the different instructions).

ALU – Arithmetic Logic Unit

The high-performance AVR ALU operates in direct connection with all 32 general purpose working registers. Within a single clock cycle, ALU operations between registers in the Register File are executed. The ALU operations are divided into three main categories – Arithmetic, Logical, and Bit-functions.

In-System Programmable Flash Program Memory

The ATtiny26(L) contains 2K bytes On-chip In-System Programmable Flash memory for program storage. Since all instructions are 16- or 32-bit words, the Flash is organized as 1K x 16. The Flash memory has an endurance of at least 10,000 write/erase cycles. The ATtiny26(L) Program Counter – PC – is 10 bits wide, thus addressing the 1024 program memory addresses, see “Memory Programming” on page 106 for a detailed description on Flash data downloading. See “Program and Data Addressing Modes” on page 10 for the different program memory addressing modes.

Figure 5. SRAM Organization

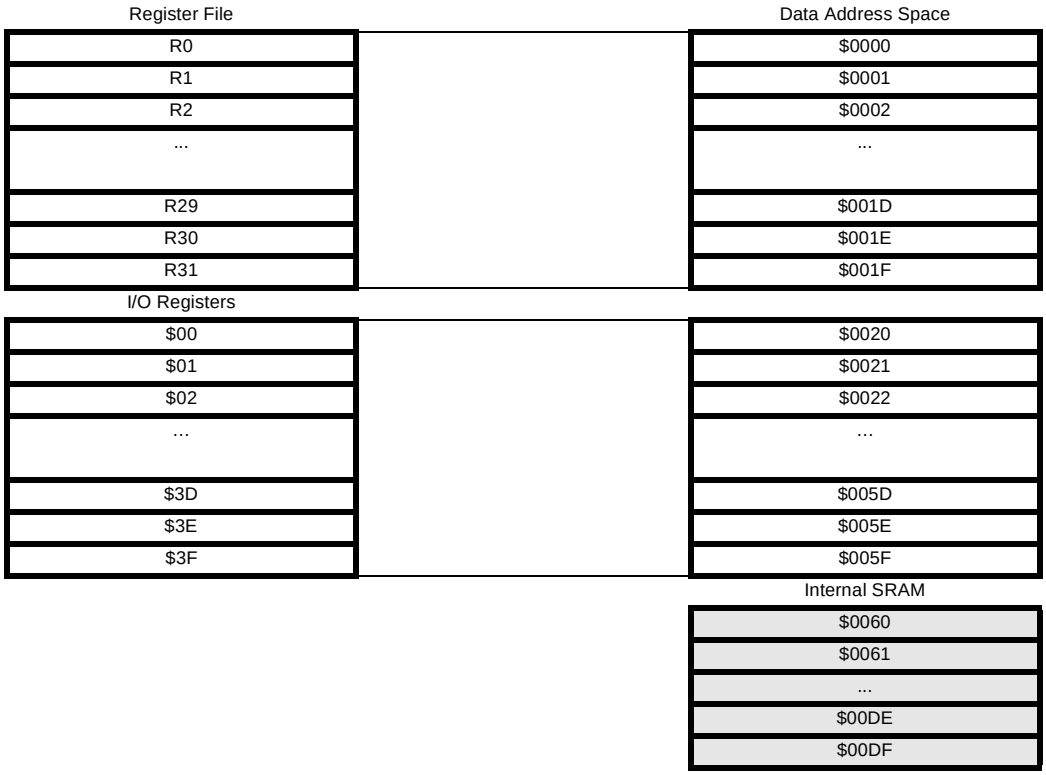

SRAM Data Memory

Figure 5 above shows how the ATtiny26(L) SRAM Memory is organized.

The lower 224 Data Memory locations address the Register File, the I/O Memory and the internal data SRAM. The first 96 locations address the Register File and I/O Memory, and the next 128 locations address the internal data SRAM.

The five different addressing modes for the data memory cover: Direct, Indirect with Displacement, Indirect, Indirect with Pre-decrement, and Indirect with Post-increment. In the Register File, registers R26 to R31 feature the indirect addressing pointer registers.

The direct addressing reaches the entire data space. The Indirect with Displacement mode features a 63 address locations reach from the base address given by the Y- or Z-register.

When using register indirect addressing modes with automatic pre-decrement and post-increment, the address registers X, Y, and Z are decremented and incremented.

The 32 general purpose working registers, 64 I/O Registers and the 128 bytes of internal data SRAM in the ATtiny26(L) are all accessible through all these addressing modes.

See the next section for a detailed description of the different addressing modes.

Program and Data Addressing Modes

The ATtiny26(L) AVR Enhanced RISC microcontroller supports powerful and efficient addressing modes for access to the Flash program memory, SRAM, Register File, and I/O Data memory. This section describes the different addressing modes supported by the AVR architecture. In the figures, OP means the operation code part of the instruction word. To simplify, not all figures show the exact location of the addressing bits.

Register Direct, Single Register Rd

Figure 6. Direct Single Register Addressing

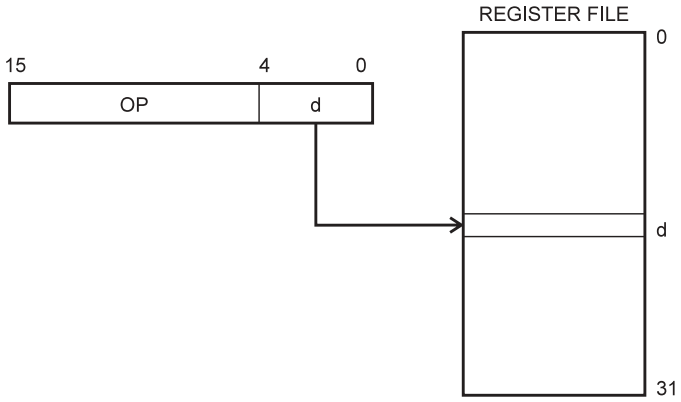

The operand is contained in register d (Rd).

Register Direct, Two Registers Rd and Rr

Figure 7. Direct Register Addressing, Two Registers

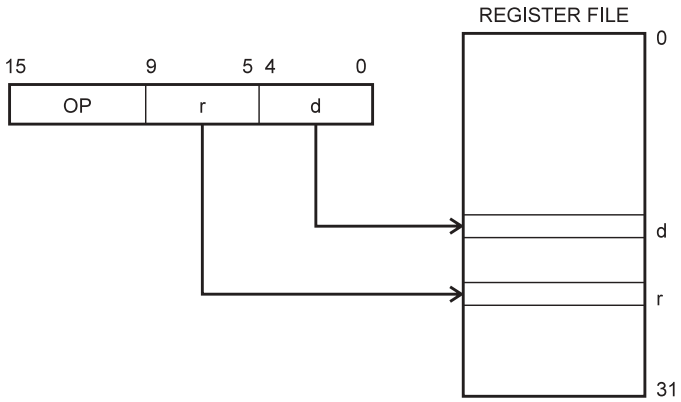

Operands are contained in register r (Rr) and d (Rd). The result is stored in register d (Rd).

I/O Direct

Figure 8. I/O Direct Addressing

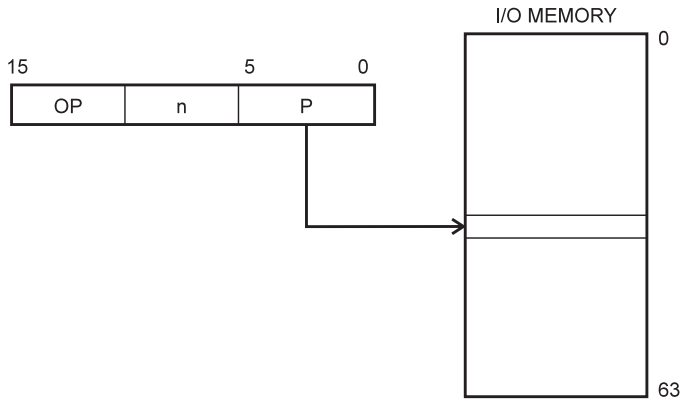

Operand address is contained in 6 bits of the instruction word. n is the destination or source register address.

Data Direct

Figure 9. Direct Data Addressing

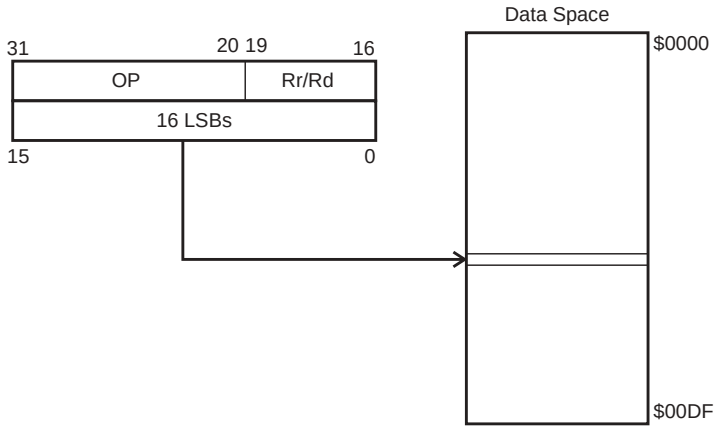

A 16-bit Data Address is contained in the 16 LSBs of a two-word instruction. Rd/Rr specify the destination or source register.

Data Indirect with Displacement

Figure 10. Data Indirect with Displacement

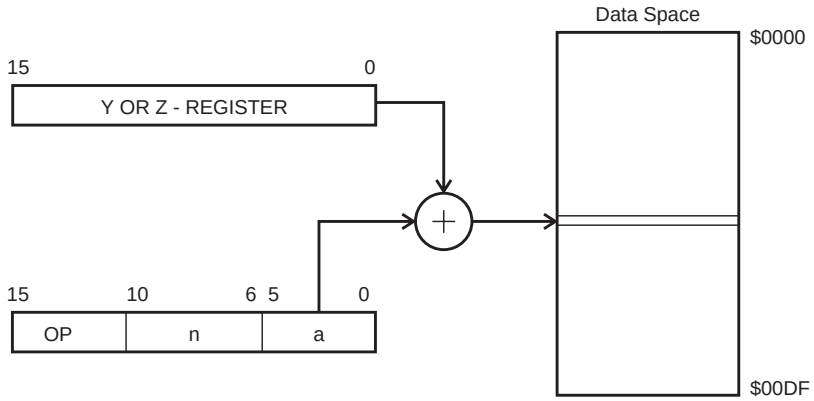

Operand address is the result of the Y- or Z-register contents added to the address contained in 6 bits of the instruction word.

Data Indirect

Figure 11. Data Indirect Addressing

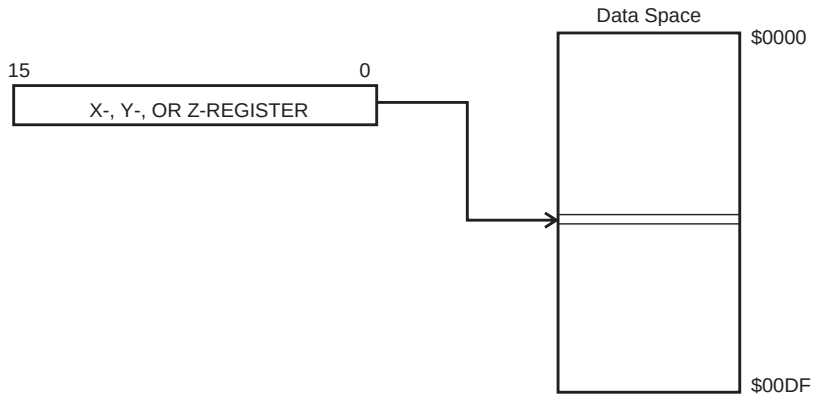

Operand address is the contents of the X-, Y-, or the Z-register.

Data Indirect with Pre-decrement

Figure 12. Data Indirect Addressing with Pre-decrement

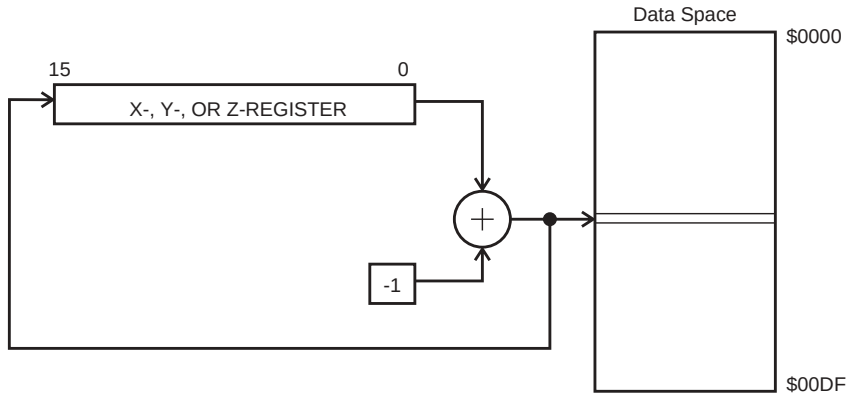

The X-, Y-, or Z-register is decremented before the operation. Operand address is the decremented contents of the X-, Y-, or Z-register.

Data Indirect with Post-increment

Figure 13. Data Indirect Addressing with Post-increment

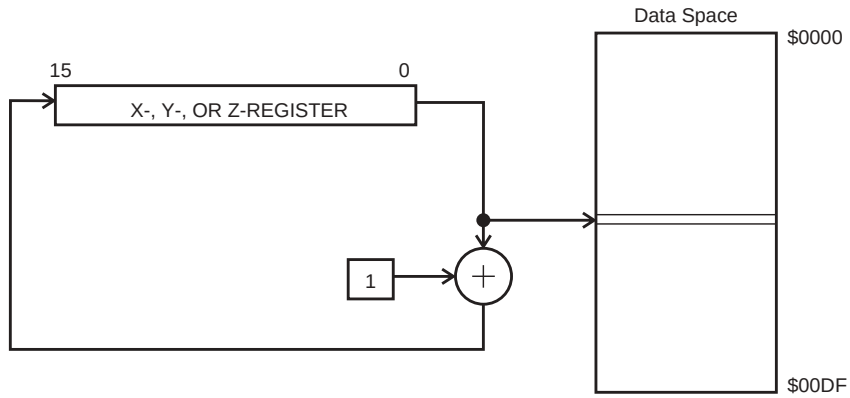

The X-, Y-, or Z-register is incremented after the operation. Operand address is the content of the X-, Y-, or Z-register prior to incrementing.

Constant Addressing Using the LPM Instruction

Figure 14. Code Memory Constant Addressing

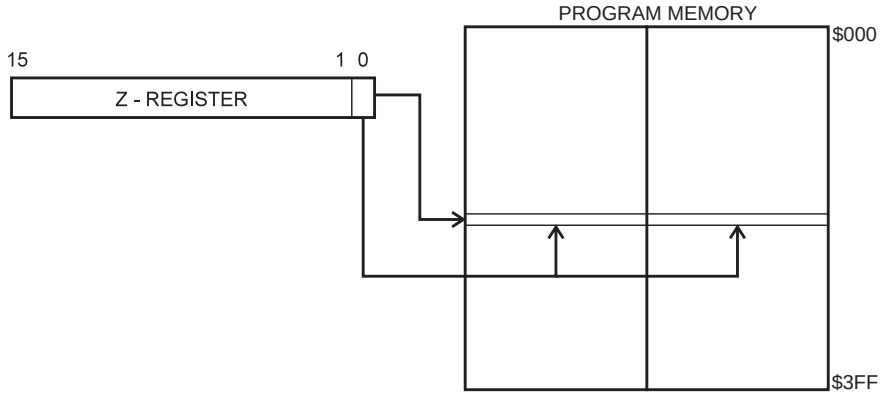

Constant byte address is specified by the Z-register contents. The 15 MSBs select word address (0 - 1K), the LSB selects low byte if cleared (LSB = 0) or high byte if set (LSB = 1).

Indirect Program Addressing, IJMP and ICALL

Figure 15. Indirect Program Memory Addressing

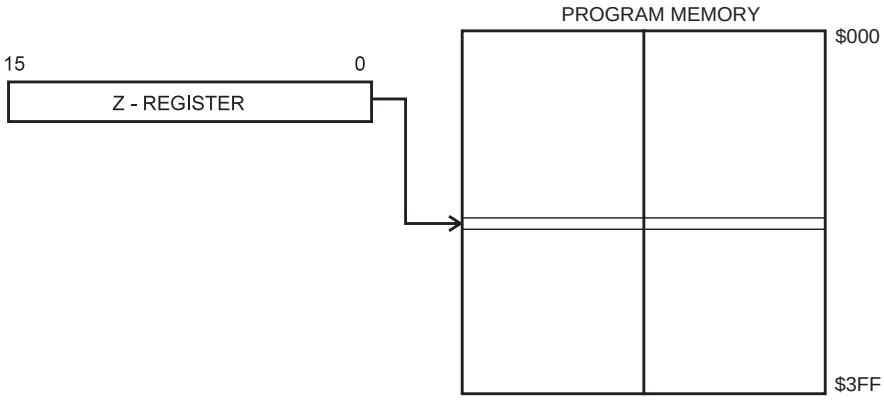

Program execution continues at address contained by the Z-register (i.e., the PC is loaded with the contents of the Z-register).

Relative Program Addressing, RJMP and RCALL

Figure 16. Relative Program Memory Addressing

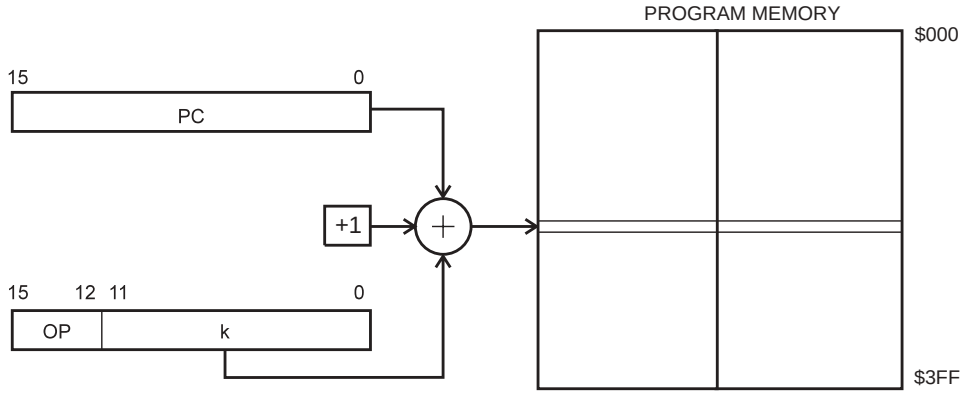

Program execution continues at address PC + k + 1. The relative address k is from -2048 to 2047.

EEPROM Data Memory

The ATtiny26(L) contains 128 bytes of data EEPROM memory. It is organized as a separate data space, in which single bytes can be read and written. The EEPROM has an endurance of at least 100,000 write/erase cycles per location. The access between the EEPROM and the CPU is described on “EEPROM Read/Write Access” on page 60 specifying the EEPROM Address Registers, the EEPROM Data Register, and the EEPROM Control Register.

For the programming of the EEPROM See “Memory Programming” on page 106.

Memory Access Times and Instruction Execution Timing

This section describes the general access timing concepts for instruction execution and internal memory access.

The AVR CPU is driven by the System Clock Ø, directly generated from the external clock crystal for the chip. No internal clock division is used.

Figure 17 shows the parallel instruction fetches and instruction executions enabled by the Harvard architecture and the fast-access Register File concept. This is the basic pipelining concept to obtain up to 1 MIPS per MHz with the corresponding unique results for functions per cost, functions per clocks, and functions per power-unit.

Figure 17. The Parallel Instruction Fetches and Instruction Executions

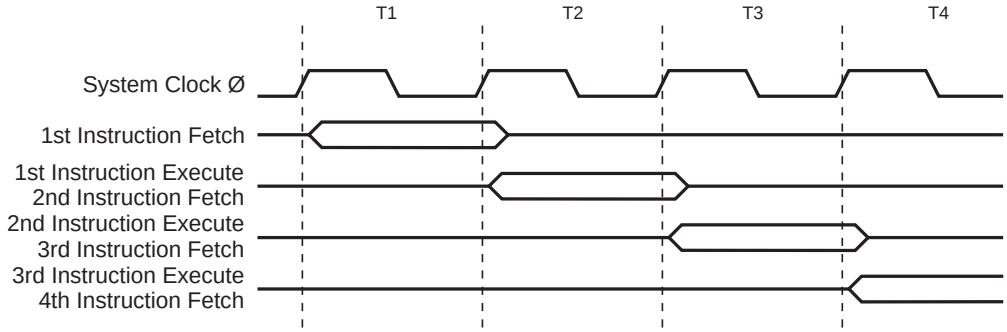

Figure 18 shows the internal timing concept for the Register File. In a single clock cycle an ALU operation using two register operands is executed, and the result is stored back to the destination register.

Figure 18. Single Cycle ALU Operation

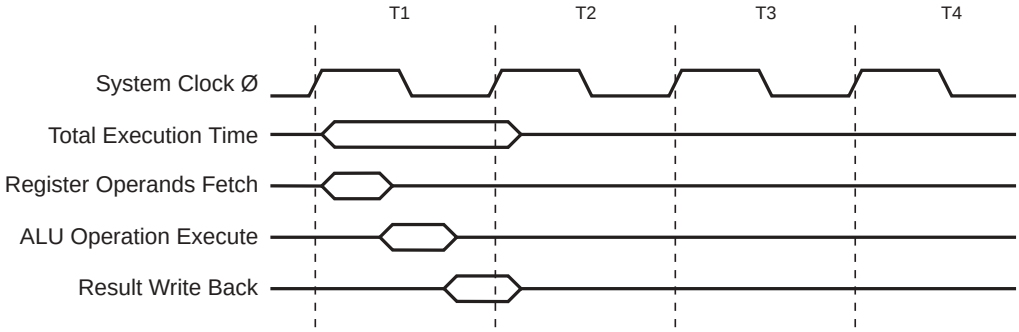

The internal data SRAM access is performed in two System Clock cycles as described in Figure 19.

Figure 19. On-chip Data SRAM Access Cycles

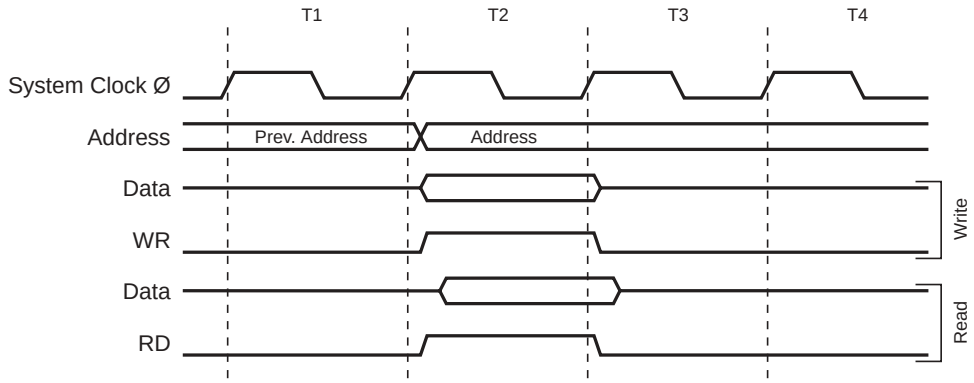

I/O Memory

The I/O space definition of the ATtiny26(L) is shown in Table 1

Table 1. ATtiny26(L) I/O Space[1]

Address Hex	Name	Function
$3F ($5F)	SREG	Status Register
$3D ($5D)	SP	Stack Pointer
$3B ($5B)	GIMSK	General Interrupt Mask Register
$3A ($5A)	GIFR	General Interrupt Flag Register
$39 ($59)	TIMSK	Timer/Counter Interrupt Mask Register
$38 ($58)	TIFR	Timer/Counter Interrupt Flag Register
$35 ($55)	MCUCR	MCU Control Register
$34 ($54)	MCUSR	MCU Status Register
$33 ($53)	TCCR0	Timer/Counter0 Control Register
$32 ($52)	TCNT0	Timer/Counter0 (8-bit)
$31 ($51)	OSCCAL	Oscillator Calibration Register
$30 ($50)	TCCR1A	Timer/Counter1 Control Register A
$2F ($4F)	TCCR1B	Timer/Counter1 Control Register B
$2E ($4E)	TCNT1	Timer/Counter1 (8-bit)
$2D ($4D)	OCR1A	Timer/Counter1 Output Compare Register A
$2C ($4C)	OCR1B	Timer/Counter1 Output Compare Register B
$2B ($4B)	OCR1C	Timer/Counter1 Output Compare Register C
$29 ($29)	PLLCSR	PLL Control and Status Register
$21 ($41)	WDTCR	Watchdog Timer Control Register
$1E ($3E)	EEAR	EEPROM Address Register
$1D ($3D)	EEDR	EEPROM Data Register
$1C ($3C)	EECR	EEPROM Control Register
$1B ($3B)	PORTA	Data Register, Port A
$1A ($3A)	DDRA	Data Direction Register, Port A
$19 ($39)	PINA	Input Pins, Port A
$18 ($38)	PORTB	Data Register, Port B
$17 ($37)	DDRB	Data Direction Register, Port B
$16 ($36)	PINB	Input Pins, Port B
$0F ($2F)	USIDR	Universal Serial Interface Data Register
$0E ($2E)	USISR	Universal Serial Interface Status Register
$0D ($2D)	USICR	Universal Serial Interface Control Register
$08 ($28)	ACSR	Analog Comparator Control and Status Register
$07 ($27)	ADMUX	ADC Multiplexer Select Register

Table 1. ATtiny26(L) I/O Space[1] (Continued)

Address Hex	Name	Function
$06($26)	ADCSR	ADC Control and Status Register
$05($25)	ADCH	ADC Data Register High
$04($24)	ADCL	ADC Data Register Low

Note: 1. Reserved and unused locations are not shown in the table.

All ATtiny26(L) I/O and peripheral registers are placed in the I/O space. The I/O locations are accessed by the IN and OUT instructions transferring data between the 32 general purpose working registers and the I/O space. I/O Registers within the address range $00 - $1F are directly bit-accessible using the SBI and CBI instructions. In these registers, the value of single bits can be checked by using the SBIS and SBIC instructions. Refer to the instruction set chapter for more details. For compatibility with future devices, reserved bits should be written zero if accessed. Reserved I/O memory addresses should never be written.

The I/O and peripheral control registers are explained in the following sections.

Status Register – SREG

The AVR Status Register – SREG – at I/O space location $3F is defined as:

Bit	7	6	5	4	3	2	1	0	
$3F ($5F)	**I**	**T**	**H**	**S**	**V**	**N**	**Z**	**C**	**SREG**
Read/Write	R/W	R/W	R/W	R/W	R/W	R/W	R/W	R/W	
Initial Value	0	0	0	0	0	0	0	0	

- **Bit 7 – I: Global Interrupt Enable**

The Global Interrupt Enable bit must be set (one) for the interrupts to be enabled. The individual interrupt enable control is then performed in the Interrupt Mask Registers – GIMSK and TIMSK. If the Global Interrupt Enable Register is cleared (zero), none of the interrupts are enabled independent of the GIMSK and TIMSK values. The I-bit is cleared by hardware after an interrupt has occurred, and is set by the RETI instruction to enable subsequent interrupts. The I-bit can also be set and cleared by the application with the SEI and CLI instructions, as described in the instruction set reference.

- **Bit 6 – T: Bit Copy Storage**

The Bit Copy instructions BLD (Bit LoaD) and BST (Bit STore) use the T-bit as source and destination for the operated bit. A bit from a register in the Register File can be copied into T by the BST instruction, and a bit in T can be copied into a bit in a register in the Register File by the BLD instruction.

- **Bit 5 – H: Half Carry Flag**

The Half Carry Flag H indicates a Half Carry in some arithmetic operations. See the Instruction Set Description for detailed information.

- **Bit 4 – S: Sign Bit, S = N ⊕ V**

The S-bit is always an exclusive or between the Negative Flag N and the Two's Complement Overflow Flag V. See the Instruction Set Description for detailed information.

- **Bit 3 – V: Two's Complement Overflow Flag**

The Two's Complement Overflow Flag V supports two's complement arithmetics. See the Instruction Set Description for detailed information.

- **Bit 2 – N: Negative Flag**

The Negative Flag N indicates a negative result after the different arithmetic and logic operations. See the Instruction Set Description for detailed information.

- **Bit 1 – Z: Zero Flag**

The Zero Flag Z indicates a zero result after the different arithmetic and logic operations. See the Instruction Set Description for detailed information.

- **Bit 0 – C: Carry Flag**

The Carry Flag C indicates a carry in an arithmetic or logic operation. See the Instruction Set Description for detailed information.

Stack Pointer – SP

The ATtiny26(L) Stack Pointer is implemented as an 8-bit register in the I/O space location $3D ($5D). As the ATtiny26(L) data memory has 224 ($E0) locations, eight bits are used.

Bit	7	6	5	4	3	2	1	0	
$3D ($5D)	**SP7**	**SP6**	**SP5**	**SP4**	**SP3**	**SP2**	**SP1**	**SP0**	**SP**
Read/Write	R/W	R/W	R/W	R/W	R/W	R/W	R/W	R/W	
Initial Value	0	0	0	0	0	0	0	0	

The Stack Pointer points to the data SRAM stack area where the Subroutine and Interrupt Stacks are located. This Stack space in the data SRAM must be defined by the program before any subroutine calls are executed or interrupts are enabled. The Stack Pointer must be set to point above $60. The Stack Pointer is decremented by one when data is pushed onto the Stack with the PUSH instruction, and it is decremented by two when an address is pushed onto the Stack with subroutine calls and interrupts. The Stack Pointer is incremented by one when data is popped from the Stack with the POP instruction, and it is incremented by two when an address is popped from the Stack with return from subroutine RET or return from interrupt RETI.

Reset and Interrupt Handling

The ATtiny26(L) provides eleven interrupt sources. These interrupts and the separate Reset Vector, each have a separate program vector in the program memory space. All the interrupts are assigned individual enable bits which must be set (one) together with the I-bit in the Status Register in order to enable the interrupt.

The lowest addresses in the program memory space are automatically defined as the Reset and Interrupt vectors. The complete list of vectors is shown in Table 2. The list also determines the priority levels of the different interrupts. The lower the address the higher is the priority level. RESET has the highest priority, and next is INT0 – the External Interrupt Request 0 etc.

Table 2. Reset and Interrupt Vectors

Vector No	Program Address	Source	Interrupt Definition
1	$000	RESET	Hardware Pin and Watchdog Reset
2	$001	INT0	External Interrupt Request 0
3	$002	I/O Pins	Pin Change Interrupt
4	$003	TIMER1, CMPA	Timer/Counter1 Compare Match 1A
5	$004	TIMER1, CMPB	Timer/Counter1 Compare Match 1B
6	$005	TIMER1, OVF1	Timer/Counter1 Overflow
7	$006	TIMER0, OVF0	Timer/Counter0 Overflow
8	$007	USI_STRT	USI Start
9	$008	USI_OVF	USI Overflow
A	$009	EE_RDY	EEPROM Ready
B	$00A	ANA_COMP	Analog Comparator
C	$00B	ADC	ADC Conversion Complete

The most typical and general program setup for the Reset and Interrupt Vector Addresses are:

```
Address   Labels   Code                    Comments
$000               rjmp     RESET          ; Reset handler
$001               rjmp     EXT_INT0       ; IRQ0 handler
$002               rjmp     PIN_CHANGE     ; Pin change handler
$003               rjmp     TIM1_CMP1A     ; Timer1 compare match 1A
$004               rjmp     TIM1_CMP1B     ; Timer1 compare match 1B
$005               rjmp     TIM1_OVF       ; Timer1 overflow handler
$006               rjmp     TIM0_OVF       ; Timer0 overflow handler
$007               rjmp     USI_STRT       ; USI Start handler
$008               rjmp     USI_OVF        ; USI Overflow handler
$009               rjmp     EE_RDY         ; EEPROM Ready handler
$00A               rjmp     ANA_COMP       ; Analog Comparator handler
$00B               rjmp     ADC            ; ADC Conversion Handler
;
$009      RESET:   ldi      r16, RAMEND    ; Main program start
$00A               out      SP, r16
$00B               sei
  …         …          …      …
```

Reset Sources

The ATtiny26(L) provides four sources of reset:

- Power-on Reset. The MCU is reset when the supply voltage is below the Power-on Reset threshold (V_{POT}).
- External Reset. To use the PB7/$\overline{\text{RESET}}$ pin as an External Reset, instead of I/O pin, unprogram ("1") the RSTDISBL Fuse. The MCU is reset when a low level is present on the $\overline{\text{RESET}}$ pin for more than 50 ns.
- Watchdog Reset. The MCU is reset when the Watchdog timer period expires and the Watchdog is enabled.
- Brown-out Reset. The MCU is reset when the supply voltage V_{CC} is below the Brown-out Reset threshold (V_{BOT}).

During reset, all I/O Registers are then set to their initial values, and the program starts execution from address $000. The instruction placed in address $000 must be an RJMP – Relative Jump – instruction to the reset handling routine. If the program never enables an interrupt source, the interrupt vectors are not used, and regular program code can be placed at these locations. Figure 20 shows the reset logic for the ATtiny26(L). Table 3 shows the timing and electrical parameters of the reset circuitry for ATtiny26(L).

Figure 20. Reset Logic for the ATtiny26(L)

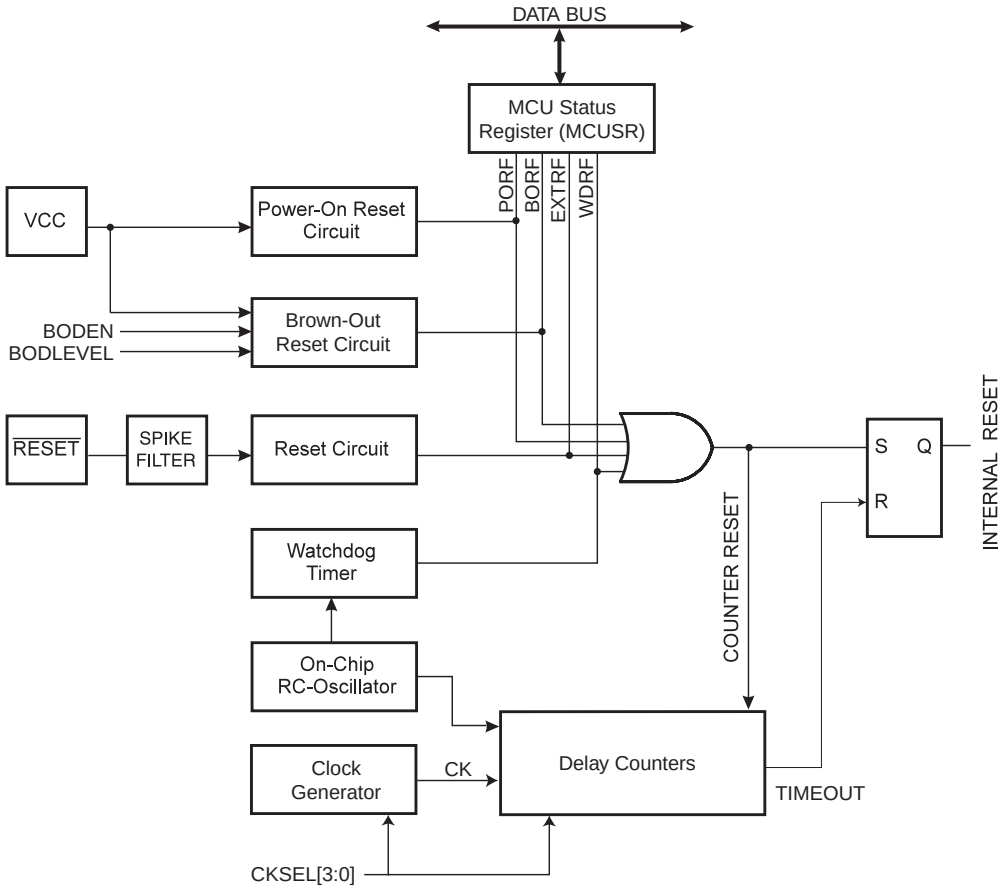

Table 3. Reset Characteristics

Symbol	Parameter	Condition	Min	Typ	Max	Units
V_{POT}	Power-on Reset Threshold Voltage (rising)			1.4	2.3	V
	Power-on Reset Threshold Voltage (falling)(1)			1.3	2.3	V
V_{RST}	$\overline{\text{RESET}}$ Pin Threshold Voltage		0.2		0.9	V_{CC}
t_{RST}	Minimum pulse width on $\overline{\text{RESET}}$ Pin			750		ns
V_{BOT}	Brown-out Reset Threshold Voltage(2)	BODLEVEL = 1	2.5	2.7	3.2	V
		BODLEVEL = 0	3.7	4.0	4.2	
t_{BOD}	Minimum low voltage period for Brown-out Detection	BODLEVEL = 1		2		µs
		BODLEVEL = 0		2		µs
V_{HYST}	Brown-out Detector hysteresis			130		mV

Notes: 1. The Power-on Reset will not work unless the supply voltage has been below V_{POT} (falling)

2. V_{BOT} may be below nominal minimum operating voltage for some devices. For devices where this is the case, the device is tested down to $V_{CC} = V_{BOT}$ during the production test. This guarantees that a Brown-out Reset will occur before V_{CC} drops to a voltage where correct operation of the microcontroller is no longer guaranteed. The test is performed using BODLEVEL=1 for ATtiny26L and BODLEVEL=0 for ATtiny26. BODLEVEL=1 is not applicable for ATtiny26.

See start-up times from reset from “System Clock and Clock Options” on page 25. When the CPU wakes up from Power-down, only the clock counting part of the start-up time is used. The Watchdog Oscillator is used for timing the real-time part of the start-up time.

Power-on Reset

A Power-on Reset (POR) pulse is generated by an On-chip Detection circuit. The detection level is defined in Table 3 The POR is activated whenever V_{CC} is below the detection level. The POR circuit can be used to trigger the Start-up Reset, as well as detect a failure in supply voltage.

The Power-on Reset (POR) circuit ensures that the device is reset from Power-on. Reaching the Power-on Reset threshold voltage invokes a delay counter, which determines the delay, for which the device is kept in RESET after V_{CC} rise. The time-out period of the delay counter can be defined by the user through the CKSEL Fuses. The different selections for the delay period are presented in “System Clock and Clock Options” on page 25. The RESET signal is activated again, without any delay, when the V_{CC} decreases below detection level.

Figure 21. MCU Start-up, $\overline{\text{RESET}}$ Tied to VCC

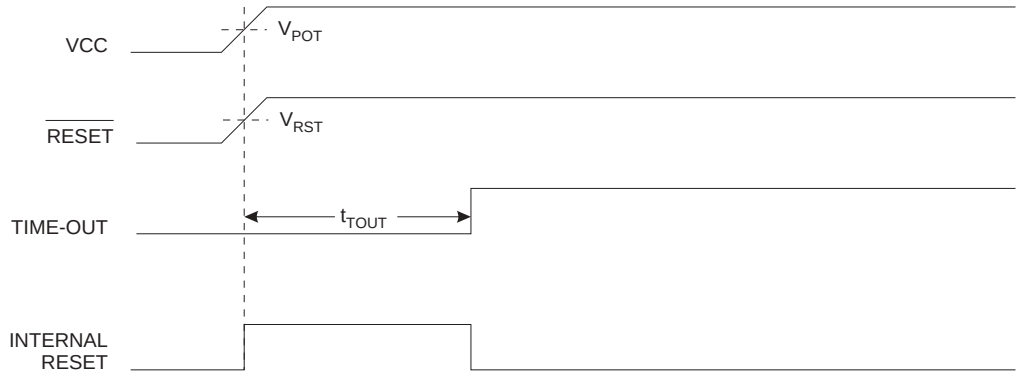

Figure 22. MCU Start-up, $\overline{\text{RESET}}$ Controlled Externally

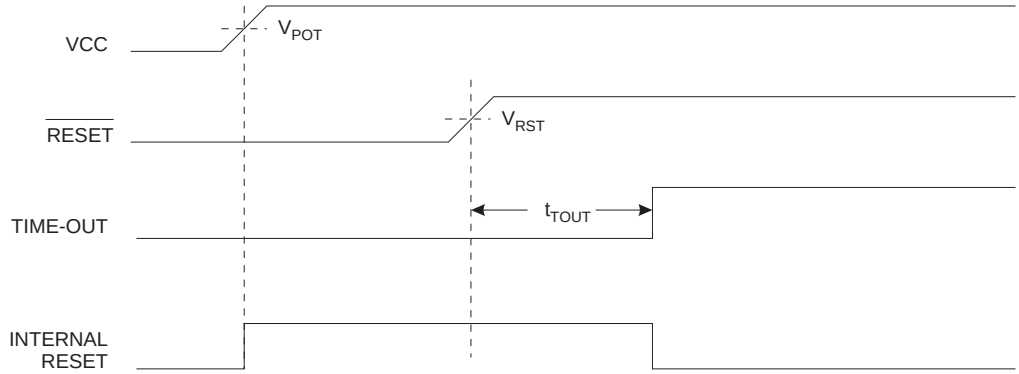

External Reset

An External Reset is generated by a low level on the $\overline{\text{RESET}}$ pin. Reset pulses longer than 500 ns will generate a reset, even if the clock is not running. Shorter pulses are not guaranteed to generate a reset. When the applied signal reaches the Reset Threshold Voltage – V_{RST} – on its positive edge, the delay timer starts the MCU after the Time-out period t_{TOUT} has expired.

Figure 23. External Reset During Operation

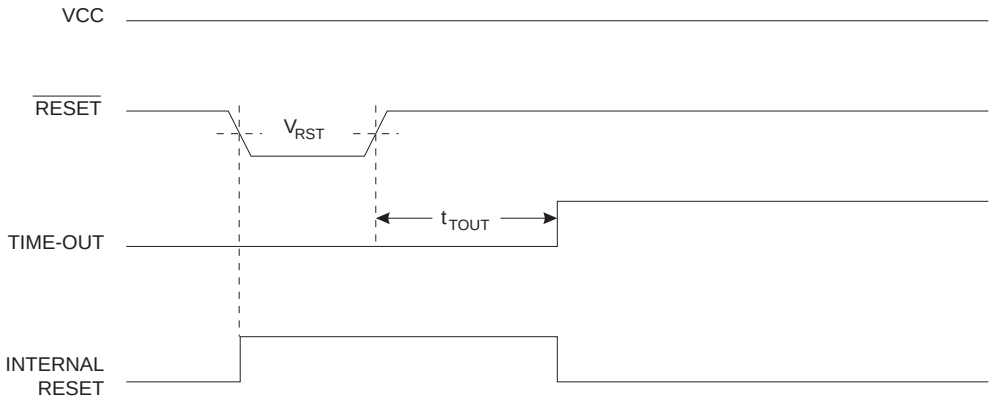

Brown-out Detection

ATtiny26(L) has an On-chip Brown-out Detection (BOD) circuit for monitoring the V_{CC} level during the operation. The BOD circuit can be enabled/disabled by the fuse BODEN. When the BOD is enabled (BODEN programmed), and V_{CC} decreases below the trigger level, the Brown-out Reset is immediately activated. When V_{CC} increases above the trigger level, the Brown-out Reset is deactivated after a delay. The delay is defined by the user in the same way as the delay of POR signal, in Table 2. The trigger level for the BOD can be selected by the fuse BODLEVEL to be 2.7V (BODLEVEL unprogrammed), or 4.0V (BODLEVEL programmed). The trigger level has a hysteresis of 50 mV to ensure spike free Brown-out Detection.

The BOD circuit will only detect a drop in V_{CC} if the voltage stays below the trigger level for longer than t_{BOD} given in Table 3.

Figure 24. Brown-out Reset During Operation

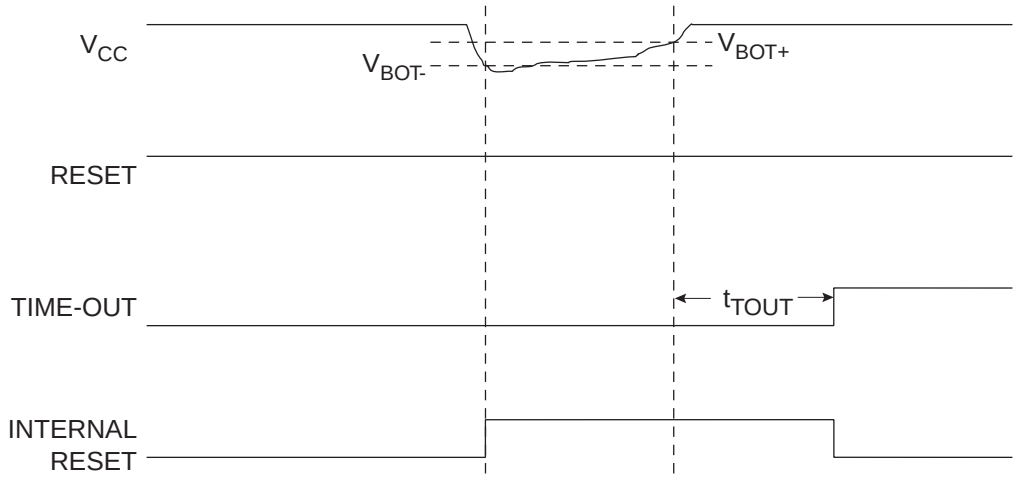

Watchdog Reset

When the Watchdog times out, it will generate a short reset pulse of one CK cycle duration. On the falling edge of this pulse, the delay timer starts counting the Time-out period t_{TOUT}. Refer to page 58 for details on operation of the Watchdog.

Figure 25. Watchdog Time-out

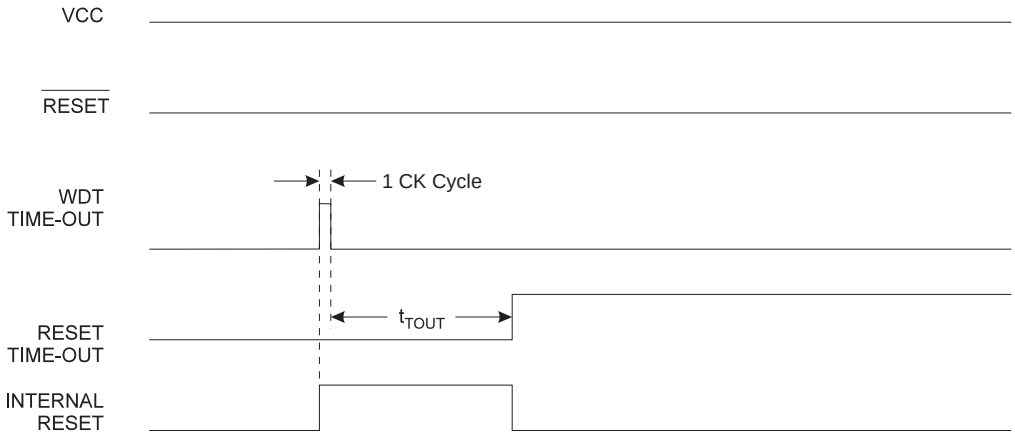

System Clock and Clock Options

Clock Systems and their Distribution

Figure 26 presents the principal clock systems in the AVR and their distribution. All of the clocks need not be active at a given time. In order to reduce power consumption, the clocks to modules not being used can be halted by using different sleep modes, as described in “Power Management and Sleep Modes” on page 41. The clock systems are detailed below.

Figure 26. Clock Distribution

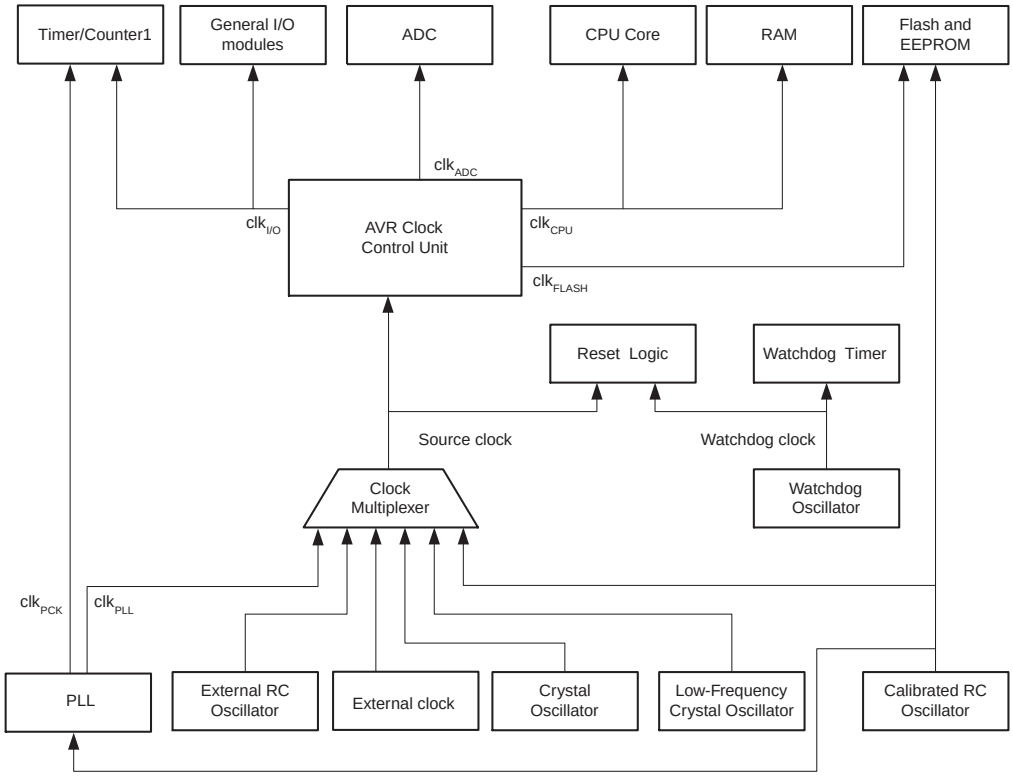

CPU Clock – clk_{CPU}

The CPU clock is routed to parts of the system concerned with operation of the AVR core. Examples of such modules are the General Purpose Register File, the Status Register and the data memory holding the Stack Pointer. Halting the CPU clock inhibits the core from performing general operations and calculations.

I/O Clock – $clk_{I/O}$

The I/O clock is used by the majority of the I/O modules, like Timer/Counters, and USI. The I/O clock is also used by the External Interrupt module, but note that some external interrupts are detected by asynchronous logic, allowing such interrupts to be detected even if the I/O clock is halted.

Flash Clock – clk_{FLASH}

The Flash clock controls operation of the Flash interface. The Flash clock is usually active simultaneously with the CPU clock.

ADC Clock – clk_{ADC}

The ADC is provided with a dedicated clock domain. This allows halting the CPU and I/O clocks in order to reduce noise generated by digital circuitry. This gives more accurate ADC conversion results.

Internal PLL for Fast Peripheral Clock Generation – clk_{PCK}

The internal PLL in ATtiny26(L) generates a clock frequency that is 64x multiplied from nominally 1 MHz input. The source of the 1 MHz PLL input clock is the output of the internal RC Oscillator which is automatically divided down to 1 MHz, if needed. See the Figure 27 on page 26. When the PLL reference frequency is the nominal 1 MHz, the fast peripheral clock is 64 MHz. The fast peripheral clock, or a clock prescaled from that, can be selected as the clock source for Timer/Counter1.

The PLL is locked on the RC Oscillator and adjusting the RC Oscillator via OSCCAL Register will adjust the fast peripheral clock at the same time. However, even if the possibly divided RC Oscillator is taken to a higher frequency than 1 MHz, the fast peripheral clock frequency saturates at 70 MHz (worst case) and remains oscillating at the maximum frequency. It should be noted that the PLL in this case is not locked any more with the RC Oscillator clock.

Therefore it is recommended not to take the OSCCAL adjustments to a higher frequency than 1 MHz in order to keep the PLL in the correct operating range. The internal PLL is enabled only when the PLLE bit in the register PLLCSR is set or the PLLCK Fuse is programmed (“0”). The bit PLOCK from the register PLLCSR is set when PLL is locked.

Both internal 1 MHz RC Oscillator and PLL are switched off in Power-down and Standby sleep modes.

Figure 27. PCK Clocking System

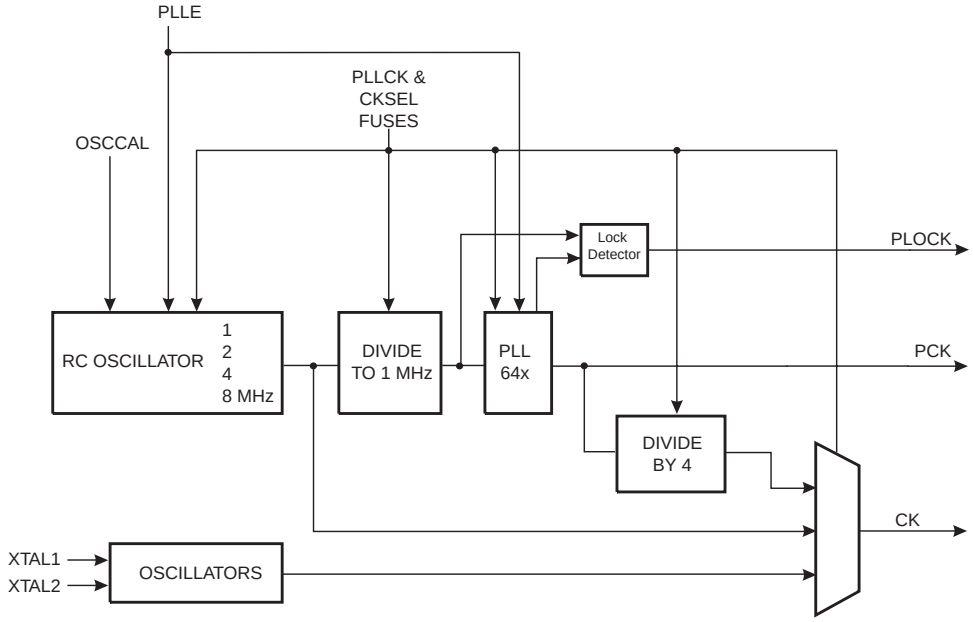

Clock Sources

The device has the following clock source options, selectable by Flash Fuse bits as shown below on Table 4. The clock from the selected source is input to the AVR clock generator, and routed to the appropriate modules.The use of pins PB5 (XTAL2), and PB4 (XTAL1) as I/O pins is limited depending on clock settings, as shown below in Table 5.

Table 4. Device Clocking Options Select

Device Clocking Option	PLLCK	CKSEL3..0
External Crystal/Ceramic Resonator	1	1111 - 1010
External Low-frequency Crystal	1	1001
External RC Oscillator	1	1000 - 0101
Calibrated Internal RC Oscillator	1	0100 - 0001
External Clock	1	0000
PLL Clock	0	0001

Table 5. PB5, and PB4 Functionality vs. Device Clocking Options(1)

Device Clocking Option	PLLCK	CKSEL [3:0]	PB4	PB5
External Clock	1	0000	XTAL1	I/O
Internal RC Oscillator	1	0001	I/O	I/O
Internal RC Oscillator	1	0010	I/O	I/O
Internal RC Oscillator	1	0011	I/O	I/O
Internal RC Oscillator	1	0100	I/O	I/O
External RC Oscillator	1	0101	XTAL1	I/O
External RC Oscillator	1	0110	XTAL1	I/O
External RC Oscillator	1	0111	XTAL1	I/O
External RC Oscillator	1	1000	XTAL1	I/O
External Low-frequency Oscillator	1	1001	XTAL1	XTAL2
External Crystal/Resonator Oscillator	1	1010	XTAL1	XTAL2
External Crystal/Resonator Oscillator	1	1011	XTAL1	XTAL2
External Crystal/Resonator Oscillator	1	1100	XTAL1	XTAL2
External Crystal/Resonator Oscillator	1	1101	XTAL1	XTAL2
External Crystal/Resonator Oscillator	1	1110	XTAL1	XTAL2
External Crystal/Resonator Oscillator	1	1111	XTAL1	XTAL2
PLL	0	0001	I/O	I/O

Note: 1. For all fuses “1” means unprogrammed while “0” means programmed.

The various choices for each clocking option is given in the following sections. When the CPU wakes up from Power-down, the selected clock source is used to time the start-up, ensuring stable oscillator operation before instruction execution starts. When the CPU starts from Reset, there is as an additional delay allowing the power to reach a stable level before commencing normal operation. The Watchdog Oscillator is used for timing this real-time part of the start-up time. The number of WDT Oscillator cycles used for

each time-out is shown in Table 6. The frequency of the Watchdog Oscillator is voltage dependent as shown in the Electrical Characteristics section.

Table 6. Number of Watchdog Oscillator Cycles

Typ Time-out (V_{CC} = 5.0V)	Typ Time-out (V_{CC} = 3.0V)	Number of Cycles
4.1 ms	4.3 ms	4K (4,096)
65 ms	69 ms	64K (65,536)

Default Clock Source

The deviced is shipped with CKSEL = “0001”, SUT = “10”, and PLLCK unprogrammed. The default clock source setting is therefore the internal RC Oscillator with longest start-up time. This default setting ensures that all users can make their desired clock source setting using an In-System or Parallel Programmer.

Crystal Oscillator

XTAL1 and XTAL2 are input and output, respectively, of an inverting amplifier which can be configured for use as an On-chip Oscillator, as shown in Figure 28. Either a quartz crystal or a ceramic resonator may be used. The maximum frequency for resonators is 12 MHz. The CKOPT Fuse should always be unprogrammed when using this clock option. C1 and C2 should always be equal. The optimal value of the capacitors depends on the crystal or resonator in use, the amount of stray capacitance, and the electromagnetic noise of the environment. Some initial guidelines for choosing capacitors for use with crystals are given in Table 7. For ceramic resonators, the capacitor values given by the manufacturer should be used.

Figure 28. Crystal Oscillator Connections

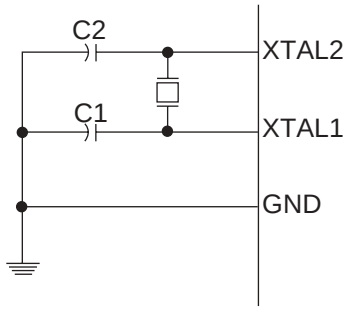

The Oscillator can operate in three different modes, each optimized for a specific frequency range. The operating mode is selected by the fuses CKSEL3..1 as shown in Table 7.

Table 7. Crystal Oscillator Operating Modes

CKSEL3..1	Frequency Range (MHz)	Recommended Range for Capacitors C1 and C2 for Use with Crystals (pF)
101[1]	0.4 - 0.9	–
110	0.9 - 3.0	12 - 22
111	3.0 - 16	12 - 22
	16 -	12 - 15

Note: 1. This option should not be used with crystals, only with ceramic resonators.

The CKSEL0 Fuse together with the SUT1..0 Fuses select the start-up times as shown in Table 8.

Table 8. Start-up Times for the Crystal Oscillator Clock Selection

CKSEL0	SUT1..0	Start-up Time from Power-down	Additional Delay from Reset (V_{CC} = 5.0V)	Recommended Usage
0	00	258 CK(1)	4.1 ms	Ceramic resonator, fast rising power
0	01	258 CK(1)	65 ms	Ceramic resonator, slowly rising power
0	10	1K CK(2)	–	Ceramic resonator, BOD enabled
0	11	1K CK(2)	4.1 ms	Ceramic resonator, fast rising power
1	00	1K CK(2)	65 ms	Ceramic resonator, slowly rising power
1	01	16K CK	–	Crystal Oscillator, BOD enabled
1	10	16K CK	4.1 ms	Crystal Oscillator, fast rising power
1	11	16K CK	65 ms	Crystal Oscillator, slowly rising power

Notes: 1. These options should only be used when not operating close to the maximum frequency of the device, and only if frequency stability at start-up is not important for the application.
2. These options are intended for use with ceramic resonators and will ensure frequency stability at start-up. They can also be used with crystals when not operating close to the maximum frequency of the device, and if frequency stability at start-up is not important for the application.

Low-frequency Crystal Oscillator

To use a 32.768 kHz watch crystal as the clock source for the device, the Low-frequency Crystal Oscillator must be selected by setting the PLLCK to “1” and CKSEL Fuses to “1001”. The crystal should be connected as shown in Figure 28. By programming the CKOPT Fuse, the user can enable internal capacitors on XTAL1 and XTAL2, thereby removing the need for external capacitors. The internal capacitors have a nominal value of 36 pF.

When this oscillator is selected, start-up times are determined by the SUT Fuses as shown in Table 9.

Table 9. Start-up Times for the Low-frequency Crystal Oscillator Clock Selection

SUT1..0	Start-up Time from Power-down	Additional Delay from Reset (V_{CC} = 5.0V)	Recommended Usage
00	1K CK(1)	4.1 ms	Fast rising power or BOD enabled
01	1K CK(1)	65 ms	Slowly rising power
10	32K CK	65 ms	Stable frequency at start-up
11	Reserved		

Note: 1. These options should only be used if frequency stability at start-up is not important for the application.

External RC Oscillator

For timing insensitive applications, the external RC configuration shown in Figure 29 can be used. The frequency is roughly estimated by the equation f = 1/(3RC). C should be at least 22 pF. By programming the CKOPT Fuse, the user can enable an internal 36 pF capacitor between XTAL1 and GND, thereby removing the need for an external capacitor.

Figure 29. External RC Configuration

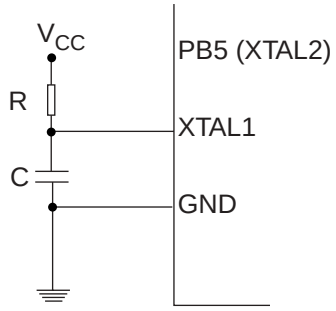

The oscillator can operate in four different modes, each optimized for a specific frequency range. The operating mode is selected by the fuses CKSEL3..0 as shown in Table 10.

Table 10. External RC Oscillator Operating Modes

CKSEL3..0	Frequency Range (MHz)
0101	- 0.9
0110	0.9 - 3.0
0111	3.0 - 8.0
1000	8.0 - 12.0

When this oscillator is selected, start-up times are determined by the SUT Fuses as shown in Table 11.

Table 11. Start-up Times for the External RC Oscillator Clock Selection

SUT1..0	Start-up Time from Power-down	Additional Delay from Reset (V_{CC} = 5.0V)	Recommended Usage
00	18 CK	–	BOD enabled
01	18 CK	4.1 ms	Fast rising power
10	18 CK	65 ms	Slowly rising power
11	6 CK(1)	4.1 ms	Fast rising power or BOD enabled

Notes: 1. This option should not be used when operating close to the maximum frequency of the device.

Calibrated Internal RC Oscillator

The calibrated internal RC Oscillator provides a fixed 1.0, 2.0, 4.0, or 8.0 MHz clock. All frequencies are nominal values at 5V and 25°C. This clock may be selected as the system clock by programming the CKSEL Fuses as shown in Table 12. If selected, it will operate with no external components. The CKOPT Fuse should always be unprogrammed when using this clock option. During Reset, hardware loads the calibration byte into the OSCCAL Register and thereby automatically calibrates the RC Oscillator. At 5V, 25°C and 1.0 MHz Oscillator frequency selected, this calibration gives a frequency within ± 3% of the nominal frequency. Using run-time calibration methods as described in application notes available at www.atmel.com/avr it is possible to achieve ± 1% accuracy at any given V_{CC} and Temperature. When this oscillator is used as the chip clock, the Watchdog Oscillator will still be used for the Watchdog Timer and for the reset time-out. For more information on the pre-programmed calibration value, see the section "Calibration Byte" on page 108.

Table 12. Internal Calibrated RC Oscillator Operating Modes

CKSEL3..0	Nominal Frequency (MHz)
0001(1)	1.0
0010	2.0
0011	4.0
0100	8.0

Note: 1. The device is shipped with this option selected.

When this oscillator is selected, start-up times are determined by the SUT Fuses as shown in Table 13. PB4 (XTAL1) and PB5 (XTAL2) can be used as general I/O ports.

Table 13. Start-up Times for the Internal Calibrated RC Oscillator Clock Selection

SUT1..0	Start-up Time from Power-down	Additional Delay from Reset (V_{CC} = 5.0V)	Recommended Usage
00	6 CK	–	BOD enabled
01	6 CK	4.1 ms	Fast rising power
10(1)	6 CK	65 ms	Slowly rising power
11	Reserved		

Note: 1. The device is shipped with this option selected.

Oscillator Calibration Register – OSCCAL

Bit	7	6	5	4	3	2	1	0	
$31 ($51)	CAL7	CAL6	CAL5	CAL4	CAL3	CAL2	CAL1	CAL0	OSCCAL
Read/Write	R/W	R/W	R/W	R/W	R/W	R/W	R/W	R/W	
Initial Value	Device Specific Calibration Value								

- **Bits 7..0 – CAL7..0: Oscillator Calibration Value**

Writing the calibration byte to this address will trim the internal oscillator to remove process variations from the oscillator frequency. During Reset, the 1 MHz calibration value which is located in the signature row high byte (address 0x00) is automatically loaded into the OSCCAL Register. If the internal RC is used at other frequencies, the calibration value must be loaded manually. This can be done by first reading the signature row by a programmer, and then store the calibration values in the Flash or EEPROM. Then the value can be read by software and loaded into the OSCCAl Register. When OSCCAL is zero, the lowest available frequency is chosen. Writing non-zero values to this register

will increase the frequency of the internal oscillator. Writing $FF to the register gives the highest available frequency. The calibrated Oscillator is used to time EEPROM and Flash access. If EEPROM or Flash is written, do not calibrate to more than 10% above the nominal frequency. Otherwise, the EEPROM or Flash write may fail. Note that the oscillator is intended for calibration to 1.0, 2.0, 4.0, or 8.0 MHz. Tuning to other values is not guaranteed, as indicated in Table 14.

Table 14. Internal RC Oscillator Frequency Range.

OSCCAL Value	Min Frequency in Percentage of Nominal Frequency	Max Frequency in Percentage of Nominal Frequency
$00	50%	100%
$7F	75%	150%
$FF	100%	200%

External Clock

To drive the device from an external clock source, XTAL1 should be driven as shown in Figure 30. To run the device on an external clock, the CKSEL Fuses must be programmed to “0000” and PLLCK to “1”. By programming the CKOPT Fuse, the user can enable an internal 36 pF capacitor between XTAL1 and GND.

Figure 30. External Clock Drive Configuration

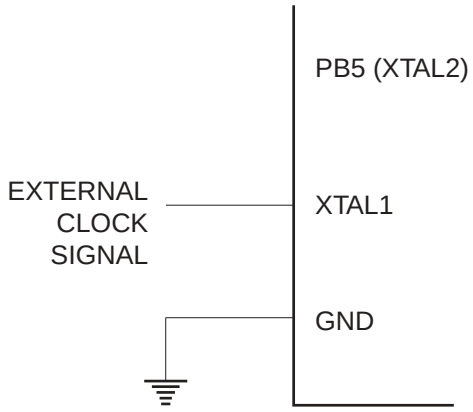

When this clock source is selected, start-up times are determined by the SUT Fuses as shown in Table 15.

Table 15. Start-up Times for the External Clock Selection

SUT1..0	Start-up Time from Power-down	Additional Delay from Reset (V_{CC} = 5.0V)	Recommended Usage
00	6 CK	–	BOD enabled
01	6 CK	4.1 ms	Fast rising power
10	6 CK	65 ms	Slowly rising power
11	Reserved		

When applying an external clock, it is required to avoid sudden changes in the applied clock frequency to ensure stable operation of the MCU. A variation in frequency of more than 2% from one clock cycle to the next can lead to unpredictable behaviour. It is required to ensure that the MCU is kept in reset during such changes in the clock frequency.

High Frequency PLL Clock – PLL_{CLK}

There is an internal PLL that provides nominally 64 MHz clock rate locked to the RC Oscillator for the use of the Peripheral Timer/Counter1 and for the system clock source. When selected as a system clock source, by programming (“0”) the fuse PLLCK, it is divided by four. When this option is used, the CKSEL3..0 must be set to “0001”. This clocking option can be used only when operating between 4.5 - 5.5V to guaratee safe operation. The system clock frequency will be 16 MHz (64 MHz/4). When using this clock option, start-up times are determined by the SUT Fuses as shown in Table 16. See also “PCK Clocking System” on page 26.

Table 16. Start-up Times for the PLLCK

SUT1..0	Start-up Time from Power-down	Additional Delay from Reset (V_{CC} = 5.0V)	Recommended Usage
00	1K CK	–	BOD enabled
01	1K CK	4.1 ms	Fast rising power
10	1K CK	65 ms	Slowly rising power
11	16K CK	–	Slowly rising power

MCU Status Register – MCUSR

Bit	7	6	5	4	3	2	1	0	
$34 ($54)	–	–	–	–	WDRF	BORF	EXTRF	PORF	MCUSR
Read/Write	R	R	R	R	R/W	R/W	R/W	R/W	
Initial Value	0	0	0	0	See Bit Description				

- **Bit 7..4 – Res: Reserved Bits**

These bits are reserved bits in the ATtiny26(L) and always read as zero.

- **Bit 3 – WDRF: Watchdog Reset Flag**

This bit is set (one) if a Watchdog Reset occurs. The bit is reset (zero) by a Power-on Reset, or by writing a logic zero to the flag.

- **Bit 2 – BORF: Brown-out Reset Flag**

This bit is set (one) if a Brown-out Reset occurs. The bit is reset (zero) by a Power-on Reset, or by writing a logic zero to the flag.

- **Bit 1 – EXTRF: External Reset Flag**

This bit is set (one) if an External Reset occurs. The bit is reset (zero) by a Power-on Reset, or by writing a logic zero to the flag.

- **Bit 0 – PORF: Power-on Reset Flag**

This bit is set (one) if a Power-on Reset occurs. The bit is reset (zero) by writing a logic zero to the flag.

To make use of the reset flags to identify a reset condition, the user should read and then reset (zero) the MCUSR as early as possible in the program. If the register is cleared before another reset occurs, the source of the reset can be found by examining the reset flags.

Interrupt Handling

The ATtiny26(L) has two 8-bit Interrupt Mask Control Registers; GIMSK – General Interrupt Mask Register and TIMSK – Timer/Counter Interrupt Mask Register.

When an interrupt occurs, the Global Interrupt Enable I-bit is cleared (zero) and all interrupts are disabled. The user software can set (one) the I-bit to enable nested interrupts. The I-bit is set (one) when a Return from Interrupt instruction – RETI – is executed.

When the Program Counter is vectored to the actual Interrupt Vector in order to execute the interrupt handling routine, hardware clears the corresponding flag that generated the interrupt. Some of the interrupt flags can also be cleared by writing a logic one to the flag bit position(s) to be cleared.

If an interrupt condition occurs when the corresponding interrupt enable bit is cleared (zero), the interrupt flag will be set and remembered until the interrupt is enabled, or the flag is cleared by software.

If one or more interrupt conditions occur when the Global Interrupt Enable bit is cleared (zero), the corresponding interrupt flag(s) will be set and remembered until the Global Interrupt Enable bit is set (one), and will be executed by order of priority.

Note that external level interrupt does not have a flag, and will only be remembered for as long as the interrupt condition is active.

Note that the Status Register is not automatically stored when entering an interrupt routine and restored when returning from an interrupt routine. This must be handled by software.

Interrupt Response Time

The interrupt execution response for all the enabled AVR interrupts is four clock cycles minimum. After the four clock cycles the program vector address for the actual interrupt handling routine is executed. During this four clock cycle period, the Program Counter (10 bits) is pushed onto the Stack. The vector is a relative jump to the interrupt routine, and this jump takes two clock cycles. If an interrupt occurs during execution of a multi-cycle instruction, this instruction is completed before the interrupt is served.

A return from an interrupt handling routine takes four clock cycles. During these four clock cycles, the Program Counter (10 bits) is popped back from the Stack. When AVR exits from an interrupt, it will always return to the main program and execute one more instruction before any pending interrupt is served. Note that the Status Register – SREG – is not handled by the AVR hardware, neither for interrupts nor for subroutines. For the routines requiring a storage of the SREG, this must be performed by user software.

General Interrupt Mask Register – GIMSK

Bit	7	6	5	4	3	2	1	0	
$3B ($5B)	–	INT0	PCIE1	PCIE0	–	–	–	–	GIMSK
Read/Write	R	R/W	R/W	R/W	R	R	R	R	
Initial Value	0	0	0	0	0	0	0	0	

- **Bit 7 – Res: Reserved Bit**

This bit is a reserved bit in the ATtiny26(L) and always reads as zero.

- **Bit 6 – INT0: External Interrupt Request 0 Enable**

When the INT0 bit is set (one) and the I-bit in the Status Register (SREG) is set (one), the external pin interrupt is enabled. The Interrupt Sense Control0 bits 1/0 (ISC01 and ISC00) in the MCU general Control Register (MCUCR) define whether the external interrupt is activated on rising or falling edge, on pin change, or low level of the INT0 pin. Activity on the pin will cause an interrupt request even if INT0 is configured as an output.

The corresponding interrupt of External Interrupt Request 0 is executed from program memory address $001. See also “External Interrupt” on page 38.

- **Bit 5 – PCIE1: Pin Change Interrupt Enable1**

When the PCIE1 bit is set (one) and the I-bit in the Status Register (SREG) is set (one), the interrupt pin change is enabled on analog pins PB[7:4], PA[7:6] and PA[3]. Unless the alternate function masks out the interrupt, any change on the pin mentioned before will cause an interrupt. The corresponding interrupt of Pin Change Interrupt Request is executed from program memory address $002. See also “Pin Change Interrupt” on page 38.

- **Bit 4– PCIE0: Pin Change Interrupt Enable0**

When the PCIE0 bit is set (one) and the I-bit in the Status Register (SREG) is set (one), the interrupt pin change is enabled on digital pins PB[3:0]. Unless the alternate function masks out the interrupt, any change on the pin mentioned before will cause an interrupt. The corresponding interrupt of Pin Change Interrupt Request is executed from program memory address $002. See also “Pin Change Interrupt” on page 38.

- **Bits 3..0 – Res: Reserved Bits**

These bits are reserved bits in the ATtiny26(L) and always read as zero.

General Interrupt Flag Register – GIFR

Bit	7	6	5	4	3	2	1	0	
$3A ($5A)	–	INTF0	PCIF	–	–	–	–	–	GIFR
Read/Write	R	R/W	R/W	R	R	R	R	R	
Initial Value	0	0	0	0	0	0	0	0	

- **Bit 7 – Res: Reserved Bit**

This bit is a reserved bit in the ATtiny26(L) and always reads as zero.

- **Bit 6 – INTF0: External Interrupt Flag0**

When an event on the INT0 pin triggers an interrupt request, INTF0 becomes set (one). If the I-bit in SREG and the INT0 bit in GIMSK are set (one), the MCU will jump to the Interrupt Vector at address $001. The flag is cleared when the interrupt routine is executed. Alternatively, the flag can be cleared by writing a logical one to it. The flag is always cleared when INT0 is configured as level interrupt.

- **Bit 5 – PCIF: Pin Change Interrupt Flag**

When an event on pins PB[7:0], PA[7:6], or PA[3] triggers an interrupt request, PCIF becomes set (one). PCIE1 enables interrupt from analog pins PB[7:4], PA[7:6], and PA[3]. PCIE0 enables interrupt on digital pins PB[3:0]. Note that pin change interrupt enable bits PCIE1 and PCIE0 also mask the flag if they are not set. For example, if PCIE0 is cleared, a pin change on PB[3:0] does not set PCIF. If an alternate function is enabled on a pin, PCIF is masked from that individual pin. If the I-bit in SREG and the PCIE bit in GIMSK are set (one), the MCU will jump to the Interrupt Vector at address $002. The flag is cleared when the interrupt routine is executed. Alternatively, the flag can be cleared by writing a logical one to it. See also “Pin Change Interrupt” on page 38.

- **Bits 4..0 – Res: Reserved Bits**

These bits are reserved bits in the ATtiny26(L) and always read as zero.

Timer/Counter Interrupt Mask Register – TIMSK

Bit	7	6	5	4	3	2	1	0	
$39 ($59)	–	OCIE1A	OCIE1B	–	–	TOIE1	TOIE0	–	TIMSK
Read/Write	R	R/W	R/W	R	R	R/W	R/W	R	
Initial Value	0	0	0	0	0	0	0	0	

- **Bit 7 – Res: Reserved Bit**

This bit is a reserved bit in the ATtiny26(L) and always reads as zero.

- **Bit 6 – OCIE1A: Timer/Counter1 Output Compare Interrupt Enable**

When the OCIE1A bit is set (one) and the I-bit in the Status Register is set (one), the Timer/Counter1 compare match A, interrupt is enabled. The corresponding interrupt at vector $003 is executed if a compare match A occurs. The Compare Flag in Timer/Counter1 is set (one) in the Timer/Counter Interrupt Flag Register.

- **Bit 5 – OCIE1B: Timer/Counter1 Output Compare Interrupt Enable**

When the OCIE1B bit is set (one) and the I-bit in the Status Register is set (one), the Timer/Counter1 compare match B, interrupt is enabled. The corresponding interrupt at vector $004 is executed if a compare match B occurs. The Compare Flag in Timer/Counter1 is set (one) in the Timer/Counter Interrupt Flag Register.

- **Bit 4..3 – Res: Reserved Bits**

These bits are reserved bits in the ATtiny26(L) and always read as zero.

- **Bit 2 – TOIE1: Timer/Counter1 Overflow Interrupt Enable**

When the TOIE1 bit is set (one) and the I-bit in the Status Register is set (one), the Timer/Counter1 Overflow interrupt is enabled. The corresponding interrupt (at vector $005) is executed if an overflow in Timer/Counter1 occurs. The Overflow Flag (Timer1) is set (one) in the Timer/Counter Interrupt Flag Register – TIFR.

- **Bit 1 – TOIE0: Timer/Counter0 Overflow Interrupt Enable**

When the TOIE0 bit is set (one) and the I-bit in the Status Register is set (one), the Timer/Counter0 Overflow interrupt is enabled. The corresponding interrupt (at vector $006) is executed if an overflow in Timer/Counter0 occurs. The Overflow Flag (Timer0) is set (one) in the Timer/Counter Interrupt Flag Register – TIFR.

- **Bit 0 – Res: Reserved Bit**

This bit is a reserved bit in the ATtiny26(L) and always reads as zero.

Timer/Counter Interrupt Flag Register – TIFR

Bit	7	6	5	4	3	2	1	0	
$38 ($58)	–	OCF1A	OCF1B	–	–	TOV1	TOV0	–	TIFR
Read/Write	R	R/W	R/W	R	R	R/W	R/W	R	
Initial Value	0	0	0	0	0	0	0	0	

- **Bit 7 – Res: Reserved Bit**

This bit is a reserved bit in the ATtiny26(L) and always reads as zero.

- **Bit 6 – OCF1A: Output Compare Flag 1A**

The OCF1A bit is set (one) when compare match occurs between Timer/Counter1 and the data value in OCR1A – Output Compare Register 1A. OCF1A is cleared by hardware when executing the corresponding interrupt handling vector. Alternatively, OCF1A is cleared, after synchronization clock cycle, by writing a logic one to the flag. When the I-bit in SREG, OCIE1A, and OCF1A are set (one), the Timer/Counter1 A Compare Match interrupt is executed.

- **Bit 5 – OCF1B: Output Compare Flag 1B**

The OCF1B bit is set (one) when compare match occurs between Timer/Counter1 and the data value in OCR1B – Output Compare Register 1A. OCF1B is cleared by hardware when executing the corresponding interrupt handling vector. Alternatively, OCF1B is cleared, after synchronization clock cycle, by writing a logic one to the flag. When the I-bit in SREG, OCIE1B, and OCF1B are set (one), the Timer/Counter1 B Compare Match interrupt is executed.

- **Bits 4..3 – Res: Reserved Bits**

These bits are reserved bits in the ATtiny26(L) and always read as zero.

- **Bit 2 – TOV1: Timer/Counter1 Overflow Flag**

The bit TOV1 is set (one) when an overflow occurs in Timer/Counter1. TOV1 is cleared by hardware when executing the corresponding interrupt handling vector. Alternatively, TOV1 is cleared, after synchronization clock cycle, by writing a logical one to the flag. When the SREG I-bit, and TOIE1 (Timer/Counter1 Overflow Interrupt Enable), and TOV1 are set (one), the Timer/Counter1 Overflow interrupt is executed.

- **Bit 1 – TOV0: Timer/Counter0 Overflow Flag**

The bit TOV0 is set (one) when an overflow occurs in Timer/Counter0. TOV0 is cleared by hardware when executing the corresponding interrupt handling vector. Alternatively, TOV0 is cleared by writing a logical one to the flag. When the SREG I-bit, and TOIE0 (Timer/Counter0 Overflow Interrupt Enable), and TOV0 are set (one), the Timer/Counter0 Overflow interrupt is executed.

- **Bit 0 – Res: Reserved Bit**

This bit is a reserved bit in the ATtiny26(L) and always reads as zero.

External Interrupt

The External Interrupt is triggered by the INT0 pin. Observe that, if enabled, the interrupt will trigger even if the INT0 pin is configured as an output. This feature provides a way of generating a software interrupt. The External Interrupt can be triggered by a falling or rising edge, a pin change, or a low level. This is set up as indicated in the specification for the MCU Control Register – MCUCR. When the External Interrupt is enabled and is configured as level triggered, the interrupt will trigger as long as the pin is held low.

Pin Change Interrupt

The pin change interrupt is triggered by any change on any I/O pin of Port B and pins PA3, PA6, and PA7, if the interrupt is enabled and alternate function of the pin does not mask out the interrupt. The bit PCIE1 in GIMSK enables interrupt from pins PB[7:4], PA[7:6], and PA[3]. PCIE0 enables interrupt on digital pins PB[3:0].

The pin change interrupt is different from other interrupts in two ways. First, pin change interrupt enable bits PCIE1 and PCIE0 also mask the flag if they are not set. The normal operation on most interrupts is that the flag is always active and only the execution of the interrupt is masked by the interrupt enable.

Secondly, please note that pin change interrupt is disabled for any pin that is configured as an alternate function. For example, no pin change interrupt is generated from pins that are configured as AREF, AIN0 or AIN1, OC1A, $\overline{\text{OC1A}}$, OC1B, $\overline{\text{OC1B}}$, XTAL1, or XTAL2 in a fuse selected clock option, Timer0 clocking, or $\overline{\text{RESET}}$ function. See Table 17 for alternate functions which mask the pin change interrupt and how the function is enabled. For example pin change interrupt on the PB0 is disabled when USI Two-wire mode or USI Three-wire mode or Timer/Counter1 inverted output compare is enabled.

If the interrupt is enabled, the interrupt will trigger even if the changing pin is configured as an output. This feature provides a way of generating a software interrupt. Also observe that the pin change interrupt will trigger even if the pin activity triggers another interrupt, for example the external interrupt. This implies that one external event might cause several interrupts.

The value of the programmed fuse is “0” and unprogrammed is “1”. Each of the lines enables the alternate function so “or” function of the lines enables the function.

Table 17. Alternative Functions

Pin	Alternate Function	Control Register[Bit Name] which set the Alternate Function(1)	Bit or Fuse Value(2)
PA3	AREF	ADMUX[REFS0]	1
PA6	Analog Comparator	ACSR[ACD]	0
PA7	Analog Comparator	ACSR[ACD]	0
PB0	USI Two-wire mode USI Three-wire mode TC1 compare/PWM	USICR[USIWM1] USICR[USIWM1,USIWM0] TCCR1A[COM1A1,COM1A0,PWM1A]	1 01 011
PB1	USI Three-wire mode TC1 compare/PWM	USICR[USIWM1,USIWM0] TCCR1A[COM1A1] TCCR1A[COM1A0]	01 1 1
PB2	USI Two-wire mode USI Three-wire mode TC1 compare/PWM	USICR[USIWM1] USICR[USIWM1,USIWM0] TCCR1A[COM1B1,COM1B0,PWM1B]	1 01 011
PB3	TC1 compare/PWM	TCCR1A[COM1B1] TCCR1A[COM1B0]	1 1

Table 17. Alternative Functions (Continued)

Pin	Alternate Function	Control Register[Bit Name] which set the Alternate Function(1)	Bit or Fuse Value(2)
PB4	XTAL1, clock source	FUSE[PLLCK,CKSEL] FUSE[PLLCK,CKSEL]	10000 10101-11111
PB5	XTAL2, clock source	FUSE[PLLCK,CKSEL]	11001-11111
PB6	External interrupt TC0 clock	GIMSK[INT0],MCUCR[ISC01,ISC01] TCCR0[CS02,CS01]	100 11
PB7	RESET	RSTDISBL FUSE	1

Notes: 1. Each line represents a bit or fuse combination which enables the function.
2. A fuse value of “0” is programmed, “1” is unprogrammed.

MCU Control Register – MCUCR

The MCU Control Register contains control bits for general MCU functions.

Bit	7	6	5	4	3	2	1	0	
$35 ($55)	–	PUD	SE	SM1	SM0	–	ISC01	ISC00	MCUCR
Read/Write	R	R/W	R/W	R/W	R/W	R	R/W	R/W	
Initial Value	0	0	0	0	0	0	0	0	

- **Bits 7 – Res: Reserved Bit**

This bit is a reserved bit in the ATtiny26(L) and always reads as zero.

- **Bit 6 – PUD: Pull-up Disable**

When this bit is set (one), the pull-ups in the I/O ports are disabled even if the DDxn and PORTxn Registers are configured to enable the pull-ups ({DDxn, PORTxn} = 0b01). See “Configuring the Pin” on page 91 for more details about this feature.

- **Bit 5 – SE: Sleep Enable**

The SE bit must be set (one) to make the MCU enter the Sleep mode when the SLEEP instruction is executed. To avoid the MCU entering the Sleep mode unless it is the programmers purpose, it is recommended to set the Sleep Enable SE bit just before the execution of the SLEEP instruction.

- **Bits 4,3 – SM1/SM0: Sleep Mode Select Bits 1 and 0**

These bits select between the four available Sleep modes, as shown in the following table.

Table 18. Sleep Modes

SM1	SM0	Sleep Mode
0	0	Idle mode
0	1	ADC Noise Reduction mode
1	0	Power-down mode
1	1	Standby mode

For details, refer to the paragraph “Sleep Modes” below.

- **Bit 2 – Res: Reserved Bit**

This bit is a reserved bit in the ATtiny26(L) and always reads as zero.

- **Bits 1, 0 – ISC01, ISC00: Interrupt Sense Control 0 Bit 1 and Bit 0**

The External Interrupt 0 is activated by the external pin INT0 if the SREG I-flag and the corresponding interrupt mask is set (one). The activity on the external INT0 pin that activates the interrupt is defined in the following table.

Table 19. Interrupt 0 Sense Control[1]

ISC01	ISC00	Description
0	0	The low level of INT0 generates an interrupt request.
0	1	Any change on INT0 generates an interrupt request.
1	0	The falling edge of INT0 generates an interrupt request.
1	1	The rising edge of INT0 generates an interrupt request.

Note: 1. When changing the ISC10/ISC00 bits, INT0 must be disabled by clearing its Interrupt Enable bit in the GIMSK Register. Otherwise an interrupt can occur when the bits are changed.

Power Management and Sleep Modes

Sleep modes enable the application to shut down unused modules in the MCU, thereby saving power. The AVR provides various sleep modes allowing the user to tailor the power consumption to the application's requirements.

To enter any of the four sleep modes, the SE bit in MCUCR must be written to logic one and a SLEEP instruction must be executed. The SM1, and SM0 bits in the MCUCR Register select which sleep mode (Idle, ADC Noise Reduction, Power Down, or Stand-by) will be activated by the SLEEP instruction. See Table 18 for a summary. If an enabled interrupt occurs while the MCU is in a sleep mode, the MCU wakes up. The MCU is then halted for four cycles in addition to the start-up time, it executes the interrupt routine, and resumes execution from the instruction following SLEEP. The contents of the Register File and SRAM are unaltered when the device wakes up from sleep. If a Reset occurs during sleep mode, the MCU wakes up and executes from the Reset Vector.

Table 20 on page 42 presents the different clock systems in the ATtiny26, and their distribution. The figure is helpful in selecting an appropriate sleep mode.

Idle Mode

When the SM1..0 bits are written to "00", the SLEEP instruction makes the MCU enter Idle mode, stopping the CPU but allowing Analog Comparator, ADC, USI, Timer/Counters, Watchdog, and the interrupt system to continue operating. This sleep mode basically halts clk_{CPU} and clk_{FLASH}, while allowing the other clocks to run.

Idle mode enables the MCU to wake up from external triggered interrupts as well as internal ones like the Timer Overflow and USI Start and Overflow interrupts. If wake-up from the Analog Comparator interrupt is not required, the Analog Comparator can be powered down by setting the ACD bit in the Analog Comparator Control and Status Register – ACSR. This will reduce power consumption in Idle mode. If the ADC is enabled, a conversion starts automatically when this mode is entered.

ADC Noise Reduction Mode

When the SM1..0 bits are written to "01", the SLEEP instruction makes the MCU enter ADC Noise Reduction mode, stopping the CPU but allowing the ADC, the External Interrupts, the USI start condition detection, and the Watchdog to continue operating (if enabled). This sleep mode basically halts $clk_{I/O}$, clk_{CPU}, and clk_{FLASH}, while allowing the other clocks to run.

This improves the noise environment for the ADC, enabling higher resolution measurements. If the ADC is enabled, a conversion starts automatically when this mode is entered. Apart form the ADC Conversion Complete interrupt, only an External Reset, a Watchdog Reset, a Brown-out Reset, USI start condition interrupt, an EEPROM ready interrupt, an External Level Interrupt on INT0, or a pin change interrupt can wake up the MCU from ADC Noise Reduction mode.

Power-down Mode

When the SM1..0 bits are written to "10", the SLEEP instruction makes the MCU enter Power-down mode. In this mode, the External Oscillator is stopped, while the External Interrupts, the USI start condition detection, and the Watchdog continue operating (if enabled). Only an External Reset, a Watchdog Reset, a Brown-out Reset, USI start condition interrupt, an External Level Interrupt on INT0, or a pin change interrupt can wake up the MCU. This sleep mode basically halts all generated clocks, allowing operation of asynchronous modules only.

When waking up from Power-down mode, there is a delay from the wake-up condition occurs until the wake-up becomes effective. This allows the clock to restart and become stable after having been stopped. The wake-up period is defined by the same CKSEL Fuses that define the reset time-out period, as described in "Clock Sources" on page 27.

Note that if a level triggered external interrupt or pin change interrupt is used from Power-down mode, the changed level must be held for some time to wake up the MCU. This makes the MCU less sensitive to noise. The changed level is sampled twice by the Watchdog Oscillator clock, and if both these samples have the required level, the MCU will wake up. The period of the Watchdog Oscillator is 1.0 µs (nominal) at 3.0V and 25°C. The frequency of the Watchdog Oscillator is voltage dependent as shown in the Electrical Characteristics section.

If the wake-up condition disappears before the MCU wakes up and starts to execute, e.g., a low level on INT0 is not held long enough, the interrupt causing the wake-up will not be executed.

Standby Mode

When the SM1..0 bits are “11” and an External Crystal/Resonator clock option is selected, the SLEEP instruction forces the MCU into the Standby mode. This mode is identical to Power-down with the exception that the Oscillator is kept running. From Standby mode, the device wakes up in only six clock cycles.

Table 20. Active Clock Domains and Wake-up Sources in the different Sleep Modes.

	Active Clock domains				**Oscillators**	**Wake-up Sources**				
Sleep Mode	clk_{CPU}	clk_{FLASH}	clk_{IO}	clk_{ADC}	Main Clock Source Enabled	INT0, and Pin Change	USI Start Condition	EEPROM Ready	ADC	Other I/O
Idle			X	X	X	X	X	X	X	X
ADC Noise Reduction				X	X	X(2)	X	X	X	
Power-down						X(2)	X			
Standby(1)					X	X(2)	X			

Notes: 1. Only recommended with external crystal or resonator selected as clock source.
2. Only level interrupt INT0.

Minimizing Power Consumption

There are several issues to consider when trying to minimize the power consumption in an AVR controlled system. In general, sleep modes should be used as much as possible, and the sleep mode should be selected so that as few as possible of the device's functions are operating. All functions not needed should be disabled. In particular, the following modules may need special consideration when trying to achieve the lowest possible power consumption.

Analog to Digital Converter

If enabled, the ADC will be enabled in all sleep modes. To save power, the ADC should be disabled before entering any sleep mode. When the ADC is turned off and on again, the next conversion will be an extended conversion. Refer to "Analog to Digital Converter" on page 77 for details on ADC operation.

Analog Comparator

When entering Idle mode, the Analog Comparator should be disabled if not used. When entering ADC Noise Reduction mode, the Analog Comparator should be disabled. In the other sleep modes, the Analog Comparator is automatically disabled. However, if the Analog Comparator is set up to use the Internal Voltage Reference as input, the Analog Comparator should be disabled in all sleep modes. Otherwise, the Internal Voltage Reference will be enabled, independent of sleep mode. Refer to "Analog Comparator" on page 74 for details on how to configure the Analog Comparator.

Brown-out Detector

If the Brown-out Detector is not needed in the application, this module should be turned off. If the Brown-out Detector is enabled by the BODEN Fuse, it will be enabled in all sleep modes, and hence, always consume power. In the deeper sleep modes, this will contribute significantly to the total current consumption. Refer to "Brown-out Detection" on page 24 for details on how to configure the Brown-out Detector.

Internal Voltage Reference

The Internal Voltage Reference will be enabled when needed by the Brown-out Detector, the Analog Comparator or the ADC. If these modules are disabled as described in the sections above, the Internal Voltage Reference will be disabled and it will not be consuming power. When turned on again, the user must allow the reference to start up before the output is used. If the reference is kept on in sleep mode, the output can be used immediately.

Watchdog Timer

If the Watchdog Timer is not needed in the application, this module should be turned off. If the Watchdog Timer is enabled, it will be enabled in all sleep modes, and hence, always consume power. In the deeper sleep modes, this will contribute significantly to the total current consumption. Refer to "Watchdog Timer" on page 58 for details on how to configure the Watchdog Timer.

Port Pins

When entering a sleep mode, all port pins should be configured to use minimum power. The most important thing is then to ensure that no pins drive resistive loads. In sleep modes where the both the I/O clock ($clk_{I/O}$) and the ADC clock (clk_{ADC}) are stopped, the input buffers of the device will be disabled. This ensures that no power is consumed by the input logic when not needed. In some cases, the input logic is needed for detecting wake-up conditions, and it will then be enabled. Refer to "Digital Input Enable and Sleep Modes" on page 94 for details on which pins are enabled. If the input buffer is enabled and the input signal is left floating or have an analog signal level close to $V_{CC}/2$, the input buffer will use excessive power.

Timer/Counters

The ATtiny26(L) provides two general purpose 8-bit Timer/Counters. The Timer/Counters have separate prescaling selection from the separate prescaler. The Timer/Counter0 clock (CK) as the clock timebase. The Timer/Counter1 has two clocking modes, a synchronous mode and an asynchronous mode. The synchronous mode uses the system clock (CK) as the clock timebase and asynchronous mode uses the fast peripheral clock (PCK) as the clock time base.

Timer/Counter0 Prescaler

Figure 31 below shows the Timer/Counter prescaler.

Figure 31. Timer/Counter0 Prescaler

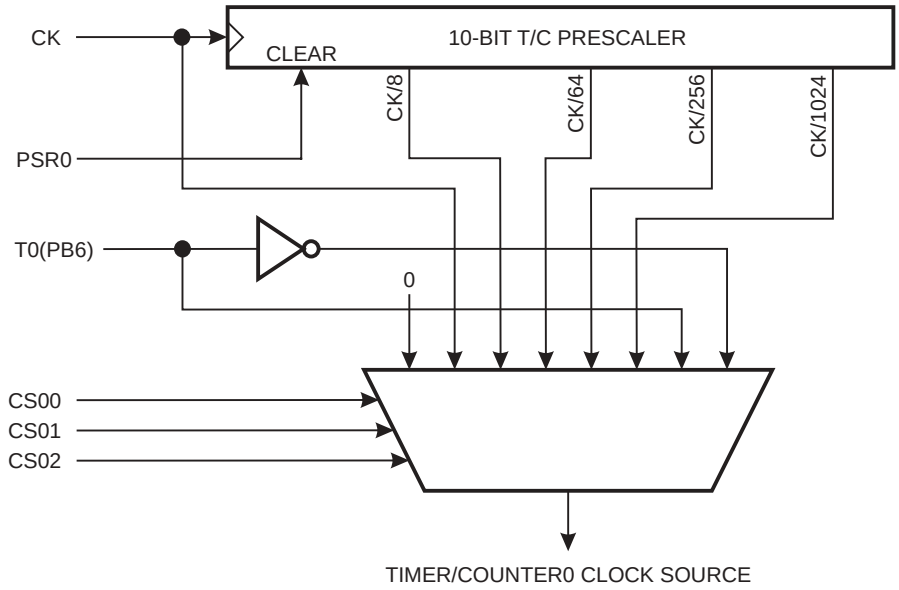

The four prescaled selections are: CK/8, CK/64, CK/256, and CK/1024 where CK is the oscillator clock. CK, external source, and stop, can also be selected as clock sources.

Timer/Counter1 Prescaler

Figure 32 shows the Timer/Counter1 prescaler. For Timer/Counter1 the clock selections are between PCK to PCK/16384 and stop in asynchronous mode and CK to CK/16384 and stop in synchronous. The clock options are described in Table 24 on page 52 and the Timer/Counter1 Control Register, TCCR1B. Setting the PSR1 bit in TCCR1B Register resets the prescaler. The PCKE bit in the PLLCSR Register enables the asynchronous mode.

Figure 32. Timer/Counter1 Prescaler

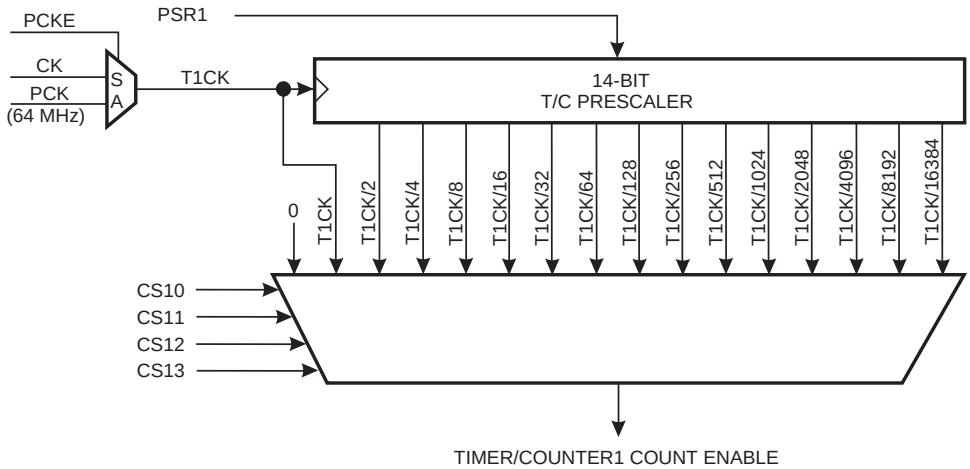

8-bit Timer/Counter0

Figure 33 shows the block diagram for Timer/Counter0.

The 8-bit Timer/Counter0 can select clock source from CK, prescaled CK, or an external pin. In addition, it can be stopped as described in the specification for the Timer/Counter0 Control Register – TCCR0. The overflow status flag is found in the Timer/Counter Interrupt Flag Register – TIFR. Control signals are found in the Timer/Counter0 Control Register – TCCR0. The interrupt enable/disable settings for Timer/Counter0 are found in the Timer/Counter Interrupt Mask Register – TIMSK.

When Timer/Counter0 is externally clocked, the external signal is synchronized with the oscillator frequency of the CPU. To ensure proper sampling of the external clock, the minimum time between two external clock transitions must be at least one internal CPU clock period. The external clock signal is sampled on the rising edge of the internal CPU clock.

The 8-bit Timer/Counter0 features both a high resolution and a high accuracy usage with the lower prescaling opportunities. Similarly, the high prescaling opportunities make the Timer/Counter0 useful for lower speed functions or exact timing functions with infrequent actions.

Figure 33. Timer/Counter0 Block Diagram

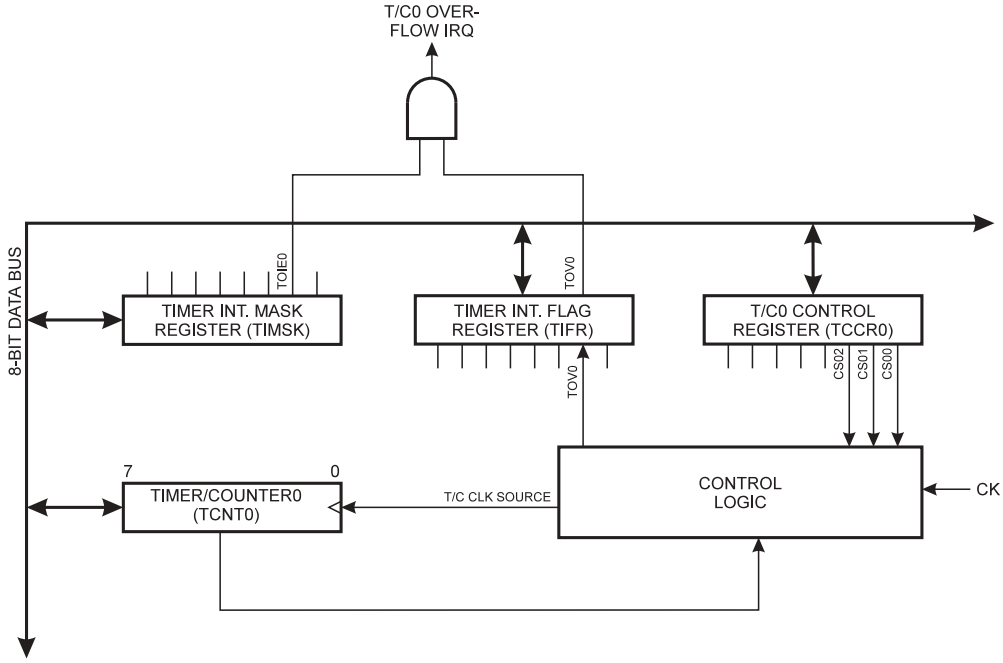

Timer/Counter0 Control Register – TCCR0

Bit	7	6	5	4	3	2	1	0	
$33 ($53)	–	–	–	–	PSR0	CS02	CS01	CS00	TCCR0
Read/Write	R	R	R	R	R/W	R/W	R/W	R/W	
Initial Value	0	0	0	0	0	0	0	0	

- **Bits 7..4 – Res: Reserved Bits**

These bits are reserved bits in the ATtiny26(L) and always read as zero.

- **Bit 3 – PSR0: Prescaler Reset Timer/Counter0**

When this bit is set (one), the prescaler of the Timer/Counter0 will be reset. The bit will be cleared by hardware after the operation is performed. Writing a zero to this bit will have no effect. This bit will always be read as zero.

- **Bits 2, 1, 0 – CS02, CS01, CS00: Clock Select0, Bit 2, 1, and 0**

The Clock Select0 bits 2, 1, and 0 define the prescaling source of Timer0.

Table 21. Clock 0 Prescale Select

CS02	CS01	CS00	Description
0	0	0	Stop, the Timer/Counter0 is stopped
0	0	1	CK
0	1	0	CK/8
0	1	1	CK/64
1	0	0	CK/256
1	0	1	CK/1024
1	1	0	External Pin T0, falling edge
1	1	1	External Pin T0, rising edge

The Stop condition provides a Timer Enable/Disable function. The CK down divided modes are scaled directly from the CK oscillator clock. If the external pin modes are used, the corresponding setup must be performed in the actual Data Direction Control Register (cleared to zero gives an input pin).

Timer/Counter0 – TCNT0

Bit	7	6	5	4	3	2	1	0	
$32 ($52)	MSB							LSB	TCNT0
Read/Write	R/W	R/W	R/W	R/W	R/W	R/W	R/W	R/W	
Initial Value	0	0	0	0	0	0	0	0	

The Timer/Counter0 is implemented as an up-counter with read and write access. If the Timer/Counter0 is written and a clock source is present, the Timer/Counter0 continues counting in the timer clock cycle following the write operation.

8-bit Timer/Counter1

The Timer/Counter1 has two clocking modes: a synchronous mode and an asynchronous mode. The synchronous mode uses the system clock (CK) as the clock timebase and asynchronous mode uses the fast peripheral clock (PCK) as the clock time base. The PCKE bit from the PLLCSR Register enables the asynchronous mode when it is set (“1”). The Timer/Counter1 general operation is described in the asynchronous mode and the operation in the synchronous mode is mentioned only if there is differences between these two modes. Figure 34 shows Timer/Counter1 synchronization register block diagram and synchronization delays in between registers. Note that all clock gating details are not shown in the figure. The Timer/Counter1 Register values go through the internal synchronization registers, which cause the input synchronization delay, before affecting the counter operation. The registers TCCR1A, TCCR1B, OCR1A, OCR1B, and OCR1C can be read back right after writing the register. The read back values are delayed for the Timer/Counter1 (TCNT1) Register and flags (OCF1A, OCF1B, and TOV1), because of the input and output synchronization.

This module features a high resolution and a high accuracy usage with the lower prescaling opportunities. Timer/Counter1 can also support two accurate, high speed, 8-bit Pulse Width Modulators using clock speeds up to 64 MHz. In this mode, Timer/Counter1 and the Output Compare Registers serve as dual stand-alone PWMs with non-overlapping non-inverted and inverted outputs. Refer to page 54 for a detailed description on this function. Similarly, the high prescaling opportunities make this unit useful for lower speed functions or exact timing functions with infrequent actions.

Figure 34. Timer/Counter1 Synchronization Register Block Diagram

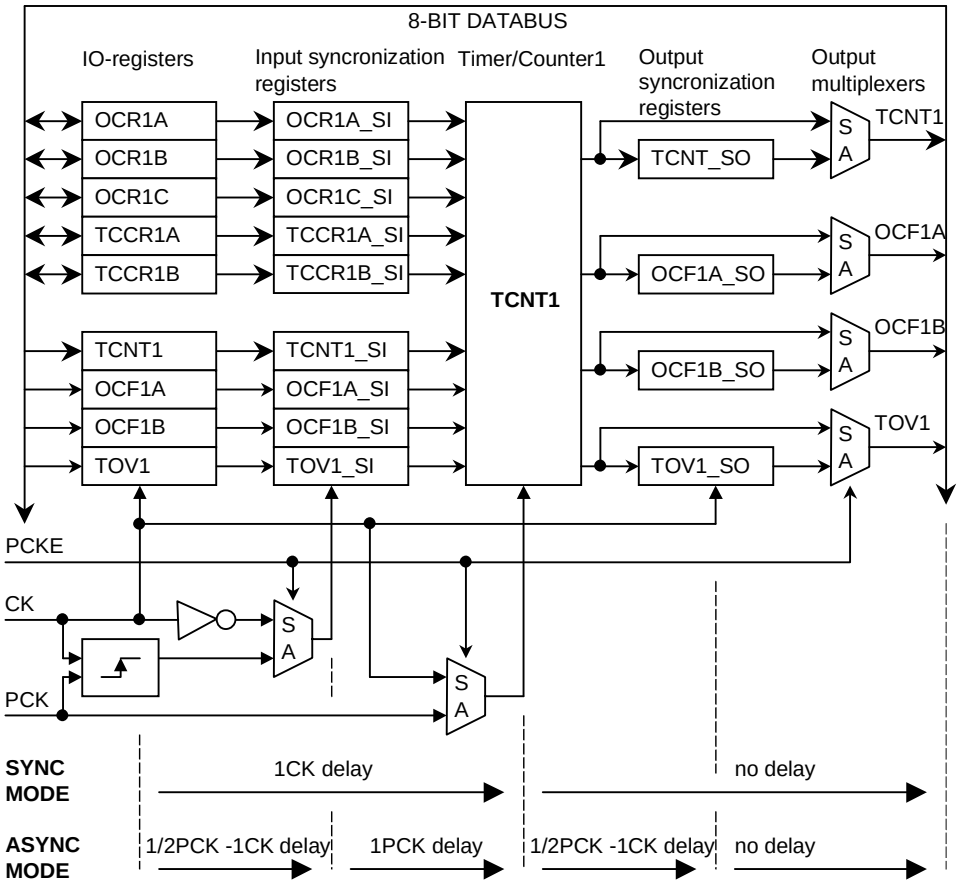

Timer/Counter1 and the prescaler allow running the CPU from any clock source while the prescaler is operating on the fast 64 MHz PCK clock in the asynchronous mode.

Note that the system clock frequency must be lower than one half of the PCK frequency. Only when the system clock is generated from PCK dividing that by two, the ratio of the PCK/system clock can be exactly two. The synchronization mechanism of the asynchronous Timer/Counter1 needs at least two edges of the PCK when the system clock is high. If the frequency of the system clock is too high, it is a risk that data or control values are lost.

The following Figure 35 shows the block diagram for Timer/Counter1.

Figure 35. Timer/Counter1 Block Diagram

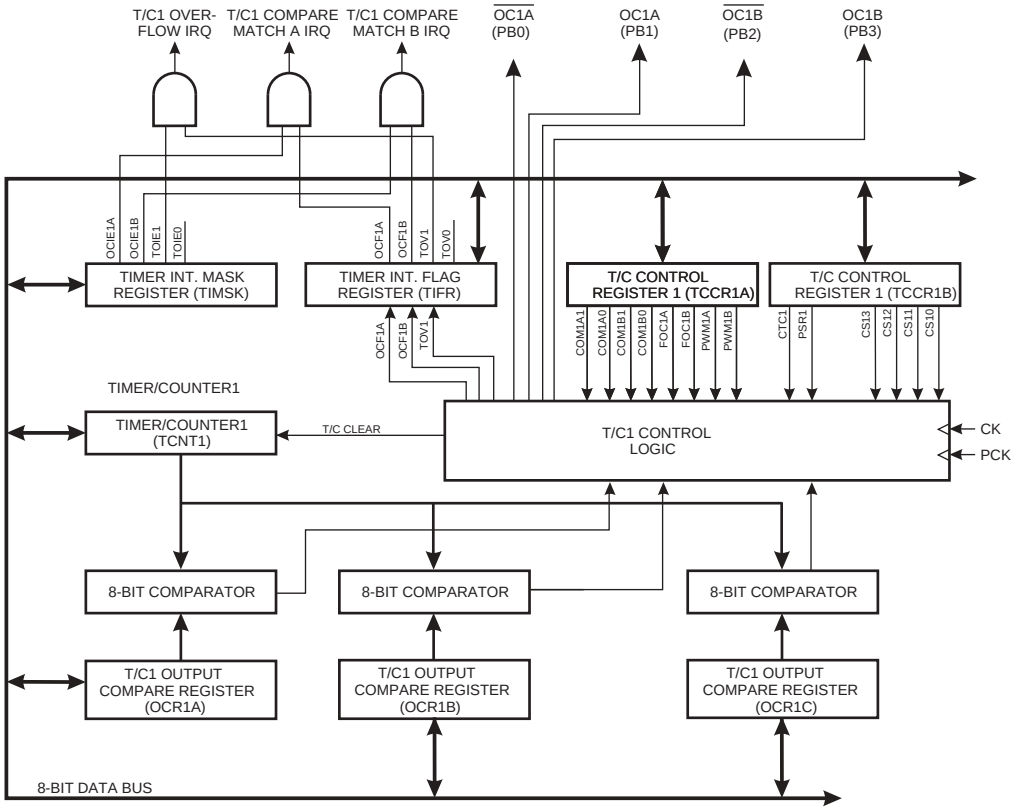

Three status flags (overflow and compare matches) are found in the Timer/Counter Interrupt Flag Register – TIFR. Control signals are found in the Timer/Counter Control Registers TCCR1A and TCCR1B. The interrupt enable/disable settings are found in the Timer/Counter Interrupt Mask Register – TIMSK.

The Timer/Counter1 contains three Output Compare Registers, OCR1A, OCR1B, and OCR1C, as the data source to be compared with the Timer/Counter1 contents. In normal mode the Output Compare functions are operational with all three Output Compare Registers. OCR1A determines action on the OC1A pin (PB1), and it can generate Timer1 OC1A interrupt in normal mode and in PWM mode. Likewise, OCR1B determines action on the OC1B pin (PB3) and it can generate Timer1 OC1B interrupt in normal mode and in PWM mode. OCR1C holds the Timer/Counter maximum value, i.e., the clear on compare match value. An overflow interrupt (TOV1) is generated when Timer/Counter1 counts from $FF to $00 or from OCR1C to $00. This function is the same for both normal and PWM mode. The inverted PWM outputs $\overline{OC1A}$ and $\overline{OC1B}$ are not connected in normal mode.

In PWM mode, OCR1A and OCR1B provide the data values against which the Timer/Counter value is compared. Upon compare match the PWM outputs (OC1A, $\overline{OC1A}$, OC1B, $\overline{OC1B}$) are generated. In PWM mode, the Timer/Counter counts up to the value specified in the Output Compare Register OCR1C and starts again from $00. This feature allows limiting the counter “full” value to a specified value, lower than $FF. Together with the many prescaler options, flexible PWM frequency selection is provided. Table 27 lists clock selection and OCR1C values to obtain PWM frequencies from 20 kHz to 250 kHz in 10 kHz steps and from 250 kHz to 500 kHz in 50 kHz steps. Higher PWM frequencies can be obtained at the expense of resolution.

Timer/Counter1 Control Register A – TCCR1A

Bit	7	6	5	4	3	2	1	0	
$30 ($50)	COM1A1	COM1A0	COM1B1	COM1B0	FOC1A	FOC1B	PWM1A	PWM1B	TCCR1A
Read/Write	R/W	R/W	R/W	R/W	R/W	R/W	R/W	R/W	
Initial Value	0	0	0	0	0	0	0	0	

- **Bits 7, 6 – COM1A1, COM1A0: Comparator A Output Mode, Bits 1 and 0**

The COM1A1 and COM1A0 control bits determine any output pin action following a Compare Match with Compare Register A in Timer/Counter1. Output pin actions affect pin PB1 (OC1A). Since this is an alternative function to an I/O port, the corresponding direction control bit must be set (one) in order to control an output pin. Note that $\overline{\text{OC1A}}$ is not connected in normal mode.

Table 22. Comparator A Mode Select

COM1A1	COM1A0	Description
0	0	Timer/Counter Comparator A disconnected from output pin OC1A.
0	1	Toggle the OC1A output line.
1	0	Clear the OC1A output line.
1	1	Set the OC1A output line.

In PWM mode, these bits have different functions. Refer to Table 25 on page 55 for a detailed description.

- **Bits 5, 4 – COM1B1, COM1B0: Comparator B Output Mode, Bits 1 and 0**

The COM1B1 and COM1B0 control bits determine any output pin action following a Compare Match with Compare Register B in Timer/Counter1. Output pin actions affect pin PB3 (OC1B). Since this is an alternative function to an I/O port, the corresponding direction control bit must be set (one) in order to control an output pin. Note that $\overline{\text{OC1B}}$ is not connected in normal mode.

Table 23. Comparator B Mode Select

COM1B1	COM1B0	Description
0	0	Timer/Counter Comparator B disconnected from output pin OC1B.
0	1	Toggle the OC1B output line.
1	0	Clear the OC1B output line.
1	1	Set the OC1B output line.

In PWM mode, these bits have different functions. Refer to Table 25 on page 55 for a detailed description.

- **Bit 3 – FOC1A: Force Output Compare Match 1A**

Writing a logical one to this bit forces a change in the Compare Match output pin PB1 (OC1A) according to the values already set in COM1A1 and COM1A0. If COM1A1 and COM1A0 written in the same cycle as FOC1A, the new settings will be used. The Force Output Compare bit can be used to change the output pin value regardless of the timer value. The automatic action programmed in COM1A1 and COM1A0 takes place as if a compare match had occurred, but no interrupt is generated. The FOC1A bit always reads as zero. FOC1A is not in use if PWM1A bit is set.

- **Bit 2 – FOC1B: Force Output Compare Match 1B**

Writing a logical one to this bit forces a change in the Compare Match output pin PB3 (OC1B) according to the values already set in COM1B1 and COM1B0. If COM1B1 and COM1B0 written in the same cycle as FOC1B, the new settings will be used. The Force Output Compare bit can be used to change the output pin value regardless of the timer value. The automatic action programmed in COM1B1 and COM1B0 takes place as if a compare match had occurred, but no interrupt is generated. The FOC1B bit always reads as zero. FOC1B is not in use if PWM1B bit is set.

- **Bit 1 – PWM1A: Pulse Width Modulator A Enable**

When set (one) this bit enables PWM mode based on comparator OCR1A in Timer/Counter1 and the counter value is reset to $00 in the CPU clock cycle after a compare match with OCR1C Register value.

- **Bit 0 – PWM1B: Pulse Width Modulator B Enable**

When set (one) this bit enables PWM mode based on comparator OCR1B in Timer/Counter1 and the counter value is reset to $00 in the CPU clock cycle after a compare match with OCR1C Register value.

Timer/Counter1 Control Register B – TCCR1B

Bit	7	6	5	4	3	2	1	0	
$2F ($4F)	**CTC1**	**PSR1**	**–**	**–**	**CS13**	**CS12**	**CS11**	**CS10**	**TCCR1B**
Read/Write	R/W	R/W	R	R	R/W	R/W	R/W	R/W	
Initial Value	0	0	0	0	0	0	0	0	

- **Bit 7 – CTC1: Clear Timer/Counter on Compare Match**

When the CTC1 control bit is set (one), Timer/Counter1 is reset to $00 in the CPU clock cycle after a compare match with OCR1C Register value. If the control bit is cleared, Timer/Counter1 continues counting and is unaffected by a compare match.

- **Bit 6 – PSR1: Prescaler Reset Timer/Counter1**

When this bit is set (one), the Timer/Counter prescaler will be reset. The bit will be cleared by hardware after the operation is performed. Writing a zero to this bit will have no effect. This bit will always read as zero.

- **Bit 5..4 – Res: Reserved Bits**

These bits are reserved bits in the ATtiny26(L) and always read as zero.

- **Bits 3..0 – CS13, CS12, CS11, CS10: Clock Select Bits 3, 2, 1, and 0**

The Clock Select bits 3, 2, 1, and 0 define the prescaling source of Timer/Counter1.

Table 24. Timer/Counter1 Prescale Select

CS13	CS12	CS11	CS10	Description Asynchronous Mode	Description Synchronous Mode
0	0	0	0	Timer/Counter1 is stopped.	Timer/Counter1 is stopped.
0	0	0	1	PCK	CK
0	0	1	0	PCK/2	CK/2
0	0	1	1	PCK/4	CK/4
0	1	0	0	PCK/8	CK/8
0	1	0	1	PCK/16	CK/16
0	1	1	0	PCK/32	CK/32
0	1	1	1	PCK/64	CK/64
1	0	0	0	PCK/128	CK/128
1	0	0	1	PCK/256	CK/256
1	0	1	0	PCK/512	CK/512
1	0	1	1	PCK/1024	CK/1024
1	1	0	0	PCK/2048	CK/2048
1	1	0	1	PCK/4096	CK/4096
1	1	1	0	PCK/8192	CK/8192
1	1	1	1	PCK/16384	CK/16384

The Stop condition provides a Timer Enable/Disable function.

Timer/Counter1 – TCNT1

Bit	7	6	5	4	3	2	1	0	
$2E ($4E)	MSB							LSB	TCNT1
Read/Write	R/W	R/W	R/W	R/W	R/W	R/W	R/W	R/W	
Initial Value	0	0	0	0	0	0	0	0	

This 8-bit register contains the value of Timer/Counter1.

Timer/Counter1 is realized as an up counter with read and write access. Due to synchronization of the CPU, Timer/Counter1 data written into Timer/Counter1 is delayed by one CPU clock cycle in synchronous mode and at most two CPU clock cycles for asynchronous mode.

Timer/Counter1 Output Compare RegisterA – OCR1A

Bit	7	6	5	4	3	2	1	0	
$2D ($4D)	MSB							LSB	OCR1A
Read/Write	R/W	R/W	R/W	R/W	R/W	R/W	R/W	R/W	
Initial Value	0	0	0	0	0	0	0	0	

The Output Compare Register A is an 8-bit read/write register.

The Timer/Counter Output Compare Register A contains data to be continuously compared with Timer/Counter1. Actions on compare matches are specified in TCCR1A. A compare match does only occur if Timer/Counter1 counts to the OCR1A value. A soft-

ware write that sets TCNT1 and OCR1A to the same value does not generate a compare match.

A compare match will set the compare interrupt flag OCF1A after a synchronization delay following the compare event.

Timer/Counter1 Output Compare RegisterB – OCR1B

Bit	7	6	5	4	3	2	1	0	
$2C ($4C)	MSB							LSB	OCR1B
Read/Write	R/W	R/W	R/W	R/W	R/W	R/W	R/W	R/W	
Initial Value	0	0	0	0	0	0	0	0	

The Output Compare Register B is an 8-bit read/write register.

The Timer/Counter Output Compare Register B contains data to be continuously compared with Timer/Counter1. Actions on compare matches are specified in TCCR1A. A compare match does only occur if Timer/Counter1 counts to the OCR1B value. A software write that sets TCNT1 and OCR1B to the same value does not generate a compare match.

A compare match will set the compare interrupt flag OCF1B after a synchronization delay following the compare event.

Timer/Counter1 Output Compare RegisterC – OCR1C

Bit	7	6	5	4	3	2	1	0	
$2B ($4B)	MSB							LSB	OCR1C
Read/Write	R/W	R/W	R/W	R/W	R/W	R/W	R/W	R/W	
Initial Value	0	0	0	0	0	0	0	0	

The Output Compare Register C is an 8-bit read/write register.

The Timer/Counter Output Compare Register C contains data to be continuously compared with Timer/Counter1. A compare match does only occur if Timer/Counter1 counts to the OCR1C value. A software write that sets TCNT1 and OCR1C to the same value does not generate a compare match.

If the CTC1 bit in TCCR1B is set, a compare match will clear TCNT1 and set an Overflow Interrupt Flag (TOV1). The flag is set after a synchronization delay following the compare event.

This register has the same function in normal mode and PWM mode.

PLL Control and Status Register – PLLCSR

Bit	7	6	5	4	3	2	1	0	
$29 ($29)	–	–	–	–	–	PCKE	PLLE	PLOCK	PLLCSR
Read/Write	R	R	R	R	R	R/W	R/W	R	
Initial Value	0	0	0	0	0	0	0/1	0	

- **Bit 7..3 – Res: Reserved Bits**

These bits are reserved bits in the ATtiny26(L) and always read as zero.

- **Bit 2 – PCKE: PCK Enable**

The PCKE bit change the Timer/Counter1 clock source. When it is set, the asynchronous clock mode is enabled and fast 64 MHz PCK clock is used as Timer/Counter1 clock source. If this bit is cleared, the synchronous clock mode is enabled, and system clock CK is used as Timer/Counter1 clock source. This bit can be set only if PLLE bit is set. It is safe to set this bit only when the PLL is locked i.e., the PLOCK bit is 1.

- **Bit 1 – PLLE: PLL Enable**

When the PLLE is set, the PLL is started and if needed internal RC Oscillator is started as a PLL reference clock. If PLL is selected as a system clock source the value for this bit is always 1.

- **Bit 0 – PLOCK: PLL Lock Detector**

When the PLOCK bit is set, the PLL is locked to the reference clock, and it is safe to enable PCK for Timer/Counter1. After the PLL is enabled, it takes about 64 µs/100 µs (typical/worst case) for the PLL to lock.

Timer/Counter1 Initialization for Asynchronous Mode

To change Timer/Counter1 to the asynchronous mode, first enable PLL, and poll the PLOCK bit until it is set, and then set the PCKE bit.

Timer/Counter1 in PWM Mode

When the PWM mode is selected, Timer/Counter1 and the Output Compare Register C – OCR1C form a dual 8-bit, free-running and glitch-free PWM generator with outputs on the PB1(OC1A) and PB3(OC1B) pins. Also inverted, non-overlapping outputs are available on pins PB0($\overline{\text{OC1A}}$) and PB2($\overline{\text{OC1B}}$), respectively. The non-overlapping output pairs (OC1A - $\overline{\text{OC1A}}$ and OC1B - $\overline{\text{OC1B}}$) are never both set at the same time. This allows driving power switches directly. The non-overlap time is one prescaled clock cycle, and the high time is one cycle shorter than the low time.

The non-overlap time is generated by delaying the rising edge, i.e., the positive edge is one prescaled and one PCK cycle delayed and the negative edge is one PCK cycle delayed in the asynchronous mode. In the synchronous mode he positive edge is one prescaled and one CK cycle delayed and the negative edge is one CK cycle delayed. The high time is also one prescaled cycle shorter in the both operation modes.

Figure 36. The Non-overlapping Output Pair

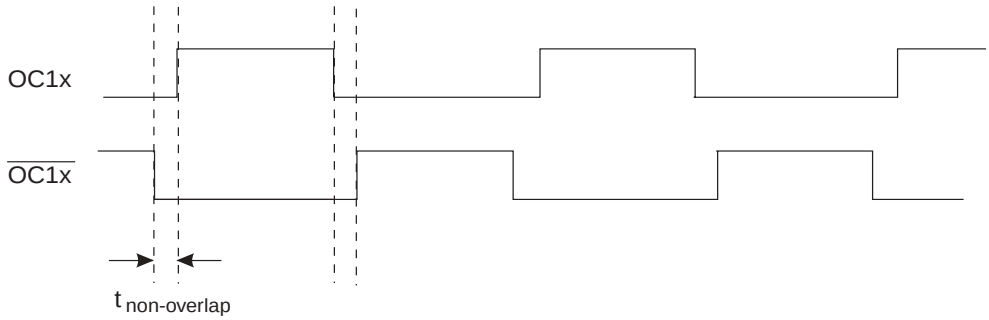

x = A or B

When the counter value match the contents of OCR1A and OCR1B, the OC1A and OC1B outputs are set or cleared according to the COM1A1/COM1A0 or COM1B1/COM1B0 bits in the Timer/Counter1 Control Register A – TCCR1A, as shown in Table 25 below.

Timer/Counter1 acts as an up-counter, counting from $00 up to the value specified in the Output Compare Register (OCR1C), and starting from $00 up again. A compare match with OC1C will set an Overflow Interrupt Flag (TOV1) after a synchronization delay following the compare event.

Table 25. Compare Mode Select in PWM Mode

COM1x1	COM1x0	Effect on Output Compare Pins
0	0	OC1x not connected. $\overline{\text{OC1x}}$ not connected.
0	1	OC1x cleared on compare match. Set one prescaled cycle after TCNT1 = $01. $\overline{\text{OC1x}}$ set one prescaled cycle after compare match. Cleared when TCNT1 = $00.
1	0	OC1x cleared on compare match. Set when TCNT1 = $01. $\overline{\text{OC1x}}$ not connected.
1	1	OC1x set one prescaled cycle after compare match. Cleared when TCNT = $00 $\overline{\text{OC1x}}$ not connected.

Note that in PWM mode, writing to the Output Compare Registers OCR1A or OCR1B, the data value is first transferred to a temporary location. The value is latched into OCR1A or OCR1B when the Timer/Counter reaches OCR1C. This prevents the occurrence of odd-length PWM pulses (glitches) in the event of an unsynchronized OCR1A or OCR1B. See Figure 37 for an example.

Figure 37. Effects of Unsynchronized OCR Latching

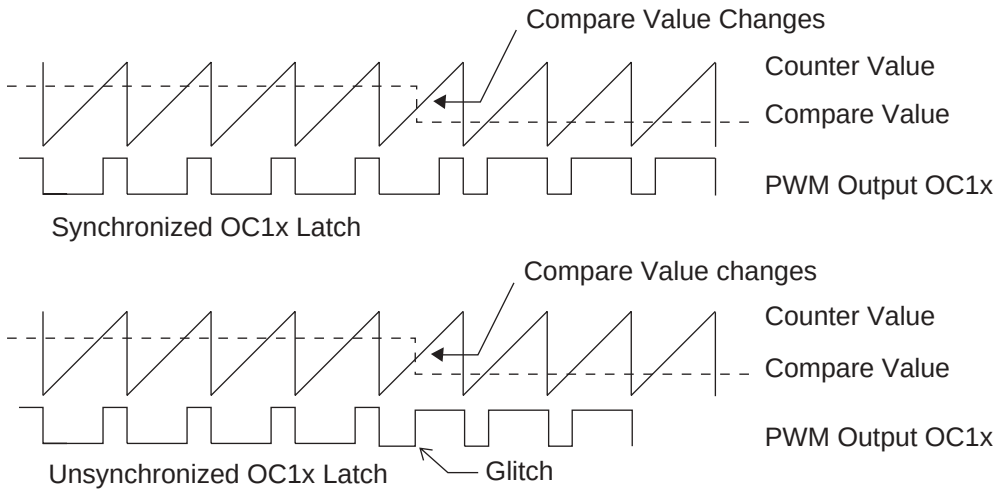

During the time between the write and the latch operation, a read from OCR1A or OCR1B will read the contents of the temporary location. This means that the most recently written value always will read out of OCR1A or OCR1B.

When OCR1A or OCR1B contain $00 or the top value, as specified in OCR1C Register, the output PB1(OC1A) or PB3(OC1B) is held low or high according to the settings of COM1A1/COM1A0. This is shown in Table 26.

Table 26. PWM Outputs OCR1x = $00 or OCR1C, x = A or B

COM1x1	COM1x0	OCR1x	Output OC1x	Output $\overline{OC1x}$
0	1	$00	L	H
0	1	OCR1C	H	L
1	0	$00	L	Not connected
1	0	OCR1C	H	Not connected
1	1	$00	H	Not connected
1	1	OCR1C	L	Not connected

In PWM mode, the Timer Overflow Flag – TOV1, is set as in normal Timer/Counter mode. Timer Overflow Interrupt1 operates exactly as in normal Timer/Counter mode, i.e., it is executed when TOV1 is set provided that Timer Overflow Interrupt and global interrupts are enabled. This also applies to the Timer Output Compare flags and interrupts.

The frequency of the PWM will be Timer Clock 1 Frequency divided by (OCR1C value + 1). See the following equation:

$$f_{PWM} = \frac{f_{TCK1}}{(OCR1C + 1)}$$

Resolution shows how many bit is required to express the value in the OCR1C Register. It is calculated by following equation

$$Resolution_{PWM} = \log_2(OCR1C + 1)$$

Table 27. Timer/Counter1 Clock Prescale Select in the Asynchronous Mode

PWM Frequency (kHz)	Clock Selection	CS13..CS10	OCR1C	RESOLUTION (Bits)
20	PCK/16	0101	199	7.6
30	PCK/16	0101	132	7.1
40	PCK/8	0100	199	7.6
50	PCK/8	0100	159	7.3
60	PCK/8	0100	132	7.1
70	PCK/4	0011	228	7.8
80	PCK/4	0011	199	7.6
90	PCK/4	0011	177	7.5
100	PCK/4	0011	159	7.3
110	PCK/4	0011	144	7.2
120	PCK/4	0011	132	7.1
130	PCK/2	0010	245	7.9
140	PCK/2	0010	228	7.8
150	PCK/2	0010	212	7.7
160	PCK/2	0010	199	7.6
170	PCK/2	0010	187	7.6
180	PCK/2	0010	177	7.5
190	PCK/2	0010	167	7.4
200	PCK/2	0010	159	7.3
250	PCK	0001	255	8.0
300	PCK	0001	212	7.7
350	PCK	0001	182	7.5
400	PCK	0001	159	7.3
450	PCK	0001	141	7.1
500	PCK	0001	127	7.0

Watchdog Timer

The Watchdog Timer is clocked from a separate On-chip Oscillator which runs at 1 MHz. This is the typical value at V_{CC} = 5V. See characterization data for typical values at other V_{CC} levels. By controlling the Watchdog Timer prescaler, the Watchdog Reset interval can be adjusted from 16 to 2048 ms. The WDR – Watchdog Reset – instruction resets the Watchdog Timer. Eight different clock cycle periods can be selected to determine the reset period. If the reset period expires without another Watchdog Reset, the ATtiny26(L) resets and executes from the Reset Vector. For timing details on the Watchdog Reset, refer to page 24.

To prevent unintentional disabling of the Watchdog, a special turn-off sequence must be followed when the Watchdog is disabled. Refer to the description of the Watchdog Timer Control Register for details.

Figure 38. Watchdog Timer

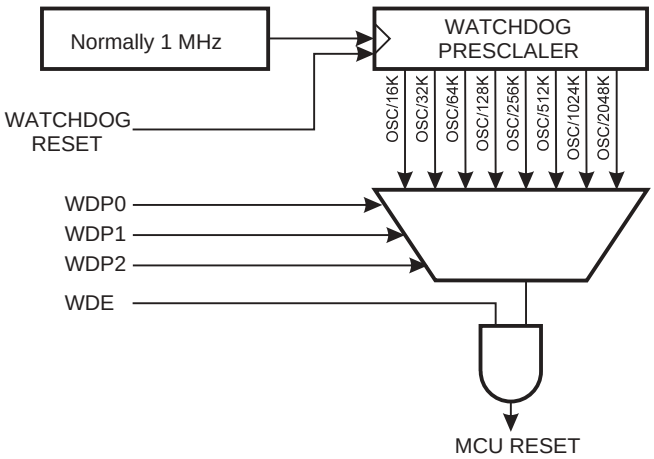

Watchdog Timer Control Register – WDTCR

Bit	7	6	5	4	3	2	1	0	
$21 ($41)	–	–	–	WDCE	WDE	WDP2	WDP1	WDP0	WDTCR
Read/Write	R	R	R	R/W	R/W	R/W	R/W	R/W	
Initial Value	0	0	0	0	0	0	0	0	

- **Bits 7..5 – Res: Reserved Bits**

These bits are reserved bits in the ATtiny26(L) and will always read as zero.

- **Bit 4 – WDCE: Watchdog Change Enable**

This bit must be set when the WDE bit is written to logic zero. Otherwise, the Watchdog will not be disabled. Once written to one, hardware will clear this bit after four clock cycles. Refer to the description of the WDE bit for a Watchdog disable procedure. In Safety Level 1 and 2, this bit must also be set when changing the prescaler bits.

- **Bit 3 – WDE: Watchdog Enable**

When the WDE is set (one) the Watchdog Timer is enabled, and if the WDE is cleared (zero) the Watchdog Timer function is disabled. WDE can be cleared only when the WDCE bit is set(one). To disable an enabled Watchdog Timer, the following procedure must be followed:

1. In the same operation, write a logical one to WDCE and WDE. A logical one must be written to WDE even though it is set to one before the disable operation starts.
2. Within the next four clock cycles, write a logical 0 to WDE. This disables the Watchdog.

- **Bits 2..0 – WDP2, WDP1, WDP0: Watchdog Timer Prescaler 2, 1, and 0**

The WDP2, WDP1 and WDP0 bits determine the Watchdog Timer prescaling when the Watchdog Timer is enabled. The different prescaling values and their corresponding time-out periods are shown in Table 28.

Table 28. Watchdog Timer Prescale Select(1)

WDP2	WDP1	WDP0	Number of WDT Oscillator Cycles	Typical Time-out at V_{CC} = 3.0V	Typical Time-out at V_{CC} = 5.0V
0	0	0	16K (16,384)	17.1 ms	16.3 ms
0	0	1	32K (32,768)	34.3 ms	32.5 ms
0	1	0	64K (65,536)	68.5 ms	65 ms
0	1	1	128K (131,072)	0.14 s	0.13 s
1	0	0	256K (262,144)	0.27 s	0.26 s
1	0	1	512K (524,288)	0.55 s	0.52 s
1	1	0	1,024K (1,048,576)	1.1 s	1.0 s
1	1	1	2,048K (2,097,152)	2.2 s	2.1 s

Note: 1. The frequency of the Watchdog Oscillator is voltage dependent. The WDR – Watchdog Reset – instruction should always be executed before the Watchdog Timer is enabled. This ensures that the reset period will be in accordance with the Watchdog Timer prescale settings. If the Watchdog Timer is enabled without reset, the Watchdog Timer may not start counting from zero.

EEPROM Read/Write Access

The EEPROM Access Registers are accessible in the I/O space.

The write access time is typically 8.3 ms. A self-timing function lets the user software detect when the next byte can be written. A special EEPROM Ready Interrupt can be set to trigger when the EEPROM is ready to accept new data.

An ongoing EEPROM write operation will complete even if a reset condition occurs.

In order to prevent unintentional EEPROM writes, a two state write procedure must be followed. Refer to the description of the EEPROM Control Register for details on this.

When the EEPROM is written, the CPU is halted for two clock cycles before the next instruction is executed.

When the EEPROM is read, the CPU is halted for four clock cycles before the next instruction is executed.

EEPROM Address Register – EEAR

Bit	7	6	5	4	3	2	1	0	
$1E ($3E)	–	EEAR6	EEAR5	EEAR4	EEAR3	EEAR2	EEAR1	EEAR0	EEAR
Read/Write	R	R/W	R/W	R/W	R/W	R/W	R/W	R/W	
Initial Value	0	X	X	X	X	X	X	X	

- **Bit 7 – RES: Reserved Bits**

This bit are reserved bit in the ATtiny26(L) and will always read as zero.

- **Bit 6..0 – EEAR6..0: EEPROM Address**

The EEPROM Address Register – EEAR – specifies the EEPROM address in the 128 bytes EEPROM space. The EEPROM data bytes are addressed linearly between 0 and 127. The initial value of EEAR is undefined. A proper value must be written before the EEPROM may be accessed.

EEPROM Data Register – EEDR

Bit	7	6	5	4	3	2	1	0	
$1D ($3D)	MSB							LSB	EEDR
Read/Write	R/W	R/W	R/W	R/W	R/W	R/W	R/W	R/W	
Initial Value	0	0	0	0	0	0	0	0	

- **Bit 7..0 – EEDR7..0: EEPROM Data**

For the EEPROM write operation, the EEDR Register contains the data to be written to the EEPROM in the address given by the EEAR Register. For the EEPROM read operation, the EEDR contains the data read out from the EEPROM at the address given by EEAR.

EEPROM Control Register – EECR

Bit	7	6	5	4	3	2	1	0	
$1C ($3C)	–	–	–	–	EERIE	EEMWE	EEWE	EERE	EECR
Read/Write	R	R	R	R	R/W	R/W	R/W	R/W	
Initial Value	0	0	0	0	0	0	0	0	

- **Bit 7..4 – RES: Reserved Bits**

These bits are reserved bits in the ATtiny26(L) and will always read as zero.

- **Bit 3 – EERIE: EEPROM Ready Interrupt Enable**

When the I-bit in SREG and EERIE are set (one), the EEPROM Ready Interrupt is enabled. When cleared (zero), the interrupt is disabled. The EEPROM Ready Interrupt generates a constant interrupt when EEWE is cleared (zero).

- **Bit 2 – EEMWE: EEPROM Master Write Enable**

The EEMWE bit determines whether setting EEWE to one causes the EEPROM to be written. When EEMWE is set (one), setting EEWE will write data to the EEPROM at the selected address. If EEMWE is zero, setting EEWE will have no effect. When EEMWE has been set (one) by software, hardware clears the bit to zero after four clock cycles. See the description of the EEWE bit for an EEPROM write procedure.

- **Bit 1 – EEWE: EEPROM Write Enable**

The EEPROM Write Enable Signal – EEWE – is the write strobe to the EEPROM. When address and data are correctly set up, the EEWE bit must be set to write the value in to the EEPROM. The EEMWE bit must be set when the logical one is written to EEWE, otherwise no EEPROM write takes place. The following procedure should be followed when writing the EEPROM (the order of steps 2 and 3 is unessential):

1. Wait until EEWE becomes zero.
2. Write new EEPROM address to EEAR (optional).
3. Write new EEPROM data to EEDR (optional).
4. Write a logical one to the EEMWE bit in EECR.
5. Within four clock cycles after setting EEMWE, write a logical one to EEWE.

Caution: An interrupt between step 4 and step 5 will make the write cycle fail, since the EEPROM Master Write Enable will time-out. If an interrupt routine accessing the EEPROM is interrupting another EEPROM access, the EEAR or EEDR Register will be modified, causing the interrupted EEPROM access to fail. It is recommended to have the Global Interrupt Flag cleared during all the steps to avoid these problems.

When the access time (typically 8.3 ms) has elapsed, the EEWE bit is cleared (zero) by hardware. The user software can poll this bit and wait for a zero before writing the next byte. When EEWE has been set, the CPU is halted for two cycles before the next instruction is executed.

- **Bit 0 – EERE: EEPROM Read Enable**

The EEPROM Read Enable Signal – EERE – is the read strobe to the EEPROM. When the correct address is set up in the EEAR Register, the EERE bit must be set. When the EERE bit is cleared (zero) by hardware, requested data is found in the EEDR Register. The EEPROM read access takes one instruction and there is no need to poll the EERE bit. When EERE has been set, the CPU is halted for four cycles before the next instruction is executed.

The user should poll the EEWE bit before starting the read operation. If a write operation is in progress when new data or address is written to the EEPROM I/O Registers, the write operation will be interrupted, and the result is undefined.

Table 29. EEPROM Programming Time

Symbol	Number of Calibrated RC Oscillator Cycles(1)	Typical Programming Time
EEPROM Write (from CPU)	8448	8.5 ms

Note: 1. Uses 1 MHz clock, independent of CKSEL-Fuse settings.

EEPROM Write During Power-down Sleep Mode

When entering Power-down sleep mode while an EEPROM write operation is active, the EEPROM write operation will continue, and will complete before the write access time has passed. However, when the write operation is completed, the crystal Oscillator continues running, and as a consequence, the device does not enter Power-down entirely. It is therefore recommended to verify that the EEPROM write operation is completed before entering Power-down.

Preventing EEPROM Corruption

During periods of low $V_{CC,}$ the EEPROM data can be corrupted because the supply voltage is too low for the CPU and the EEPROM to operate properly. These issues are the same as for board level systems using the EEPROM, and the same design solutions should be applied.

An EEPROM data corruption can be caused by two situations when the voltage is too low. First, a regular write sequence to the EEPROM requires a minimum voltage to operate correctly. Secondly, the CPU itself can execute instructions incorrectly, if the supply voltage for executing instructions is too low.

EEPROM data corruption can easily be avoided by following these design recommendations (one is sufficient):

1. Keep the AVR RESET active (low) during periods of insufficient power supply voltage. This can be done by enabling the internal Brown-out Detector (BOD) if the operating voltage matches the detection level. If not, an external Brown-out Reset Protection circuit can be applied.
2. Keep the AVR core in Power-down Sleep mode during periods of low V_{CC}. This will prevent the CPU from attempting to decode and execute instructions, effectively protecting the EEPROM Registers from unintentional writes.
3. Store constants in Flash memory if the ability to change memory contents from software is not required. Flash memory can not be updated by the CPU, and will not be subject to corruption.

Universal Serial Interface – USI

The Universal Serial Interface, or USI, provides the basic hardware resources needed for serial communication. Combined with a minimum of control software, the USI allows significantly higher transfer rates and uses less code space than solutions based on software only. Interrupts are included to minimize the processor load. The main features of the USI are:

- **Two-wire Synchronous Data Transfer (Master or Slave, $f_{SCLmax} = f_{CK}/16$)**
- **Three-wire Synchronous Data Transfer (Master, $f_{SCKmax} = f_{CK}/2$, Slave $f_{SCKmax} = f_{CK}/4$)**
- **Data Received Interrupt**
- **Wakeup from Idle Mode**
- **In Two-wire Mode: Wake-up from All Sleep Modes, Including Power-down Mode**
- **Two-wire Start Condition Detector with Interrupt Capability**

Overview

A simplified block diagram of the USI is shown on Figure 39.

Figure 39. Universal Serial Interface, Block Diagram

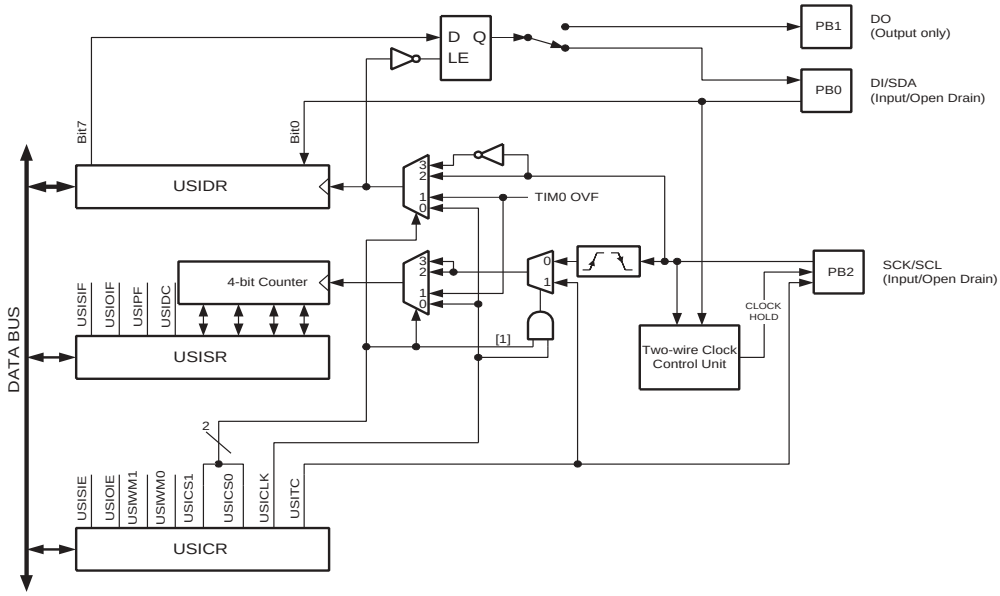

The 8-bit Shift Register is directly accessible via the data bus and contains the incoming and outgoing data. The register has no buffering so the data must be read as quickly as possible to ensure that no data is lost. The most significant bit is connected to one of two output pins depending of the wire mode configuration. A transparent latch is inserted between the serial register output and output pin, which delays the change of data output to the opposite clock edge of the data input sampling. The serial input is always sampled from the Data Input (DI) pin independent of the configuration.

The 4-bit counter can be both read and written via the data bus, and can generate an overflow interrupt. Both the serial register and the counter are clocked simultaneously by the same clock source. This allows the counter to count the number of bits received or transmitted and generate an interrupt when the transfer is complete. Note that when an external clock source is selected the counter counts both clock edges. In this case the counter counts the number of edges, and not the number of bits. The clock can be selected from three different sources: the SCK pin, Timer 0 overflow, or from software.

The Two-wire clock control unit can generate an interrupt when a start condition is detected on the Two-wire bus. It can also generate wait states by holding the clock pin low after a start condition is detected, or after the counter overflows.

Register Descriptions

USI Data Register – USIDR

Bit	7	6	5	4	3	2	1	0	
$0F ($2F)	**MSB**							**LSB**	USIDR
Read/Write	R/W	R/W	R/W	R/W	R/W	R/W	R/W	R/W	
Initial Value	0	0	0	0	0	0	0	0	

The USI uses no buffering of the serial register, i.e., when accessing the Data Register (USIDR) the serial register is accessed directly. If a serial clock occurs at the same cycle the register is written, the register will contain the value written and no shift is performed. A (left) shift operation is performed depending of the USICS1..0 bits setting. The shift operation can be controlled by an external clock edge, by a Timer/Counter0 overflow, or directly by software using the USICLK strobe bit. Note that even when no wire mode is selected (USIWM1..0 = 0) both the external data input (DI/SDA) and the external clock input (SCK/SCL) can still be used by the Shift Register.

The output pin in use, DO or SDA depending on the wire mode, is connected via the output latch to the most significant bit (bit 7) of the Data Register. The output latch is open (transparent) during the first half of a serial clock cycle when an external clock source is selected (USICS1 = 1), and constantly open when an internal clock source is used (USICS1 = 0). The output will be changed immediately when a new MSB written as long as the latch is open. The latch ensures that data input is sampled and data output is changed on opposite clock edges.

Note that the corresponding Data Direction Register (DDRB2/1) to the pin must be set to one for enabling data output from the Shift Register.

USI Status Register – USISR

Bit	7	6	5	4	3	2	1	0	
$0E ($2E)	**USISIF**	**USIOIF**	**USIPF**	**USIDC**	**USICNT3**	**USICNT2**	**USICNT1**	**USICNT0**	**USISR**
Read/Write	R/W	R/W	R/W	R	R/W	R/W	R/W	R/W	
Initial Value	0	0	0	0	0	0	0	0	

The Status Register contains interrupt flags, line status flags and the counter value.

Note that doing a Read-Modify-Write operation on USISR Register, i.e., using the SBI or CBI instructions, will clear pending interrupt flags. It is recommended that register contents is altered by using the OUT instruction only.

- **Bit 7 – USISIF: Start Condition Interrupt Flag**

When Two-wire mode is selected, the USISIF flag is set (to one) when a start condition is detected. When output disable mode or Three-wire mode is selected and (USICSx = 0b11 & USICLK = 0) or (USICS = 0b10 & USICLK = 0), any edge on the SCK pin sets the flag.

An interrupt will be generated when the flag is set while the USISIE bit in USICR and the Global Interrupt Enable Flag are set. The flag will only be cleared by writing a logical one to the USISIF bit. Clearing this bit will release the start detection hold of SCL in Two-wire mode.

A start condition interrupt will wakeup the processor from all four sleep modes.

- **Bit 6 – USIOIF: Counter Overflow Interrupt Flag**

This flag is set (one) when the 4-bit counter overflows (i.e., at the transition from 15 to 0). An interrupt will be generated when the flag is set while the USIOIE bit in USICR and

the Global Interrupt Enable Flag are set. The flag will only be cleared if a one is written to the USIOIF bit. Clearing this bit will release the counter overflow hold of SCL in Two-wire mode.

A counter overflow interrupt will wakeup the processor from Idle sleep mode.

- **Bit 5 – USIPF: Stop Condition Flag**

When Two-wire mode is selected, the USIPF flag is set (one) when a stop condition is detected. The flag is cleared by writing a one to this bit. Note that this is not an interrupt flag. This signal is useful when implementing Two-wire bus master arbitration.

- **Bit 4 – USIDC: Data Output Collision**

This bit is logical one when bit 7 in the Shift Register differs from the physical pin value. The flag is only valid when Two-wire mode is used. This signal is useful when implementing Two-wire bus master arbitration.

- **Bits 3..0 – USICNT3..0: Counter Value**

These bits reflect the current 4-bit counter value. The 4-bit counter value can directly be read or written by the CPU.

The 4-bit counter increments by one for each clock generated either by the external clock edge detector, by a Timer/Counter0 overflow, or by software using USICLK or USITC strobe bits. The clock source depends of the setting of the USICS1..0 bits. For external clock operation a special feature is added that allows the clock to be generated by writing to the USITC strobe bit. This feature is enabled by write a one to the USICLK bit while setting an external clock source (USICS1 = 1).

Note that even when no wire mode is selected (USIWM1..0 = 0) the external clock input (SCK/SCL) are can still be used by the counter.

USI Control Register – USICR

Bit	7	6	5	4	3	2	1	0	
$0D ($2D)	**USISIE**	**USIOIE**	**USIWM1**	**USIWM0**	**USICS1**	**USICS0**	**USICLK**	**USITC**	**USICR**
Read/Write	R/W	R/W	R/W	R/W	R/W	R/W	W	W	
Initial Value	0	0	0	0	0	0	0	0	

The Control Register includes interrupt enable control, wire mode setting, clock select setting, and clock strobe.

- **Bit 7 – USISIE: Start Condition Interrupt Enable**

Setting this bit to one enables the Start Condition detector interrupt. If there is a pending interrupt when the USISIE and the Global Interrupt Enable Flag is set to one, this will immediately be executed. Refer to the description of “Bit 7 – USISIF: Start Condition Interrupt Flag” on page 64 for further details.

- **Bit 6 – USIOIE: Counter Overflow Interrupt Enable**

Setting this bit to one enables the Counter Overflow interrupt. If there is a pending interrupt when the USIOIE and the Global Interrupt Enable Flag is set to one, this will immediately be executed. Refer to the description of “Bit 6 – USIOIF: Counter Overflow Interrupt Flag” on page 64 for further details.

- **Bit 5..4 – USIWM1..0: Wire Mode**

These bits set the type of wire mode to be used. Basically only the function of the outputs are affected by these bits. Data and clock inputs are not affected by the mode selected and will always have the same function. The counter and Shift Register can therefore be clocked externally, and data input sampled, even when outputs are disabled. The relations between USIWM1..0 and the USI operation is summarized in Table 30.

Table 30. Relations between USIWM1..0 and the USI Operation

USIWM1	USIWM0	Description
0	0	Outputs, clock hold, and start detector disabled. Port pins operates as normal.
0	1	Three-wire mode. Uses DO, DI, and SCK pins. The *Data Output* (DO) pin overrides the PORTB1 bit in the PORTB Register in this mode. However, the corresponding DDRB1 bit still controls the data direction. When the port pin is set as input (DDRB1 = 0) the pins pull-up is controlled by the PORTB1 bit. The *Data Input* (DI) and *Serial Clock* (SCK) pins do not affect the normal port operation. When operating as master, clock pulses are software generated by toggling the PORTB2 bit while DDRB2 is set to output. The USITC bit in the USICR Register can be used for this purpose.
1	0	Two-wire mode. Uses SDA (DI) and SCL (SCK) pins[1]. The *Serial Data* (SDA) and the *Serial Clock* (SCL) pins are bi-directional and uses open-collector output drives. The output drivers are enabled by the DDRB0/2 bit in the DDRB Register. When the output driver is enabled for the SDA pin, the output driver will force the line SDA low if the output of the Shift Register or the PORTB0 bit in the PORTB Register is zero. Otherwise the SDA line will not be driven (i.e., it is released). When the SCL pin output driver is enabled the SCL line will be forced low if the PORTB2 bit in the PORTB Register is zero, or by the start detector. Otherwise the SCL line will not be driven. The SCL line is held low when a start detector detects a start condition and the output is enabled. Clearing the start condition flag (USISIF) releases the line. The SDA and SCL pin inputs is not affected by enabling this mode. Pull-ups on the SDA and SCL port pin are disabled in Two-wire mode.
1	1	Two-wire mode. Uses SDA and SCL pins. Same operation as for the Two-wire mode described above, except that the SCL line is also held low when a counter overflow occurs, and is held low until the Counter Overflow Flag (USIOIF) is cleared.

Note: 1. The DI and SCK pins are renamed to *Serial Data* (SDA) and *Serial Clock* (SCL) respectively to avoid confusion between the modes of operation.

- **Bit 3..2 – USICS1..0: Clock Source Select**

These bits set the clock source for the Shift Register and counter. The data output latch ensures that the output is changed at the opposite edge of the sampling of the data input (DI/SDA) when using external clock source (SCK/SCL). When software strobe or Timer0 overflow clock option is selected the output latch is transparent and therefore the output is changed immediately. Clearing the USICS1..0 bits enables software strobe option. When using this option, writing a one to the USICLK bit clocks both the Shift Register and the counter. For external clock source (USICS1 = 1), the USICLK bit is no longer used as a strobe, but selects between external clocking, and software clocking by the USITC strobe bit.

Table 31 shows the relationship between the USICS1..0 and USICLK setting and clock source used for the Shift Register and the 4-bit counter.

Table 31. Relations between the USICS1..0 and USICLK Setting

USICS1	USICS0	USICLK	Shift Register Clock Source	4-bit Counter Clock Source
0	0	0	No Clock	No Clock
0	0	1	Software clock strobe (USICLK)	Software clock strobe (USICLK)
0	1	X	Timer/Counter0 overflow	Timer/Counter0 overflow
1	0	0	External, positive edge	External, both edges
1	1	0	External, negative edge	External, both edges
1	0	1	External, positive edge	Software clock strobe (USITC)
1	1	1	External, negative edge	Software clock strobe (USITC)

- **Bit 1 – USICLK: Clock Strobe**

Writing a one to this bit location strobes the Shift Register to shift one step and the counter to increment by one provided that the USICS1..0 bits are set to zero and by doing so selects the software clock strobe option. The output will change immediately when the clock strobe is executed i.e. in the same instruction cycle. The value shifted into the Shift Register is sampled the previous instruction cycle. The bit will be read as zero.

When an external clock source is selected (USICS1 = 1), the USICLK function is changed from a clock strobe to a Clock Select Register. Setting the USICLK bit in this case will select the USITC strobe bit as clock source for the 4-bit counter (see Table 31).

- **Bit 0 – USITC: Toggle Clock Port Pin**

Writing a one to this bit location toggles the PORTB2 (SCK/SCL) value from either from 0 to 1, or 1 to 0. The toggling is independent of the DDRB2 setting, but if the PORTB2 value is to be shown on the pin the DDRB2 must be set as output (to one). This feature allows easy clock generation when implementing master devices. The bit will be read as zero.

When an external clock source is selected (USICS1 = 1) and the USICLK bit is set to one, writing to the USITC strobe bit will directly clock the 4-bit counter. This allows an early detection of when the transfer is done when operating as a master device.

Functional Descriptions

Three-wire Mode

The USI Three-wire mode is compliant to the Serial Peripheral Interface (SPI) mode 0 and 1, but does not have the slave select (SS) pin functionality. However, this feature can be implemented in software if necessary. Pin names used by this mode are: DI, DO, and SCK.

Figure 40. Three-wire Mode Operation, Simplified Diagram

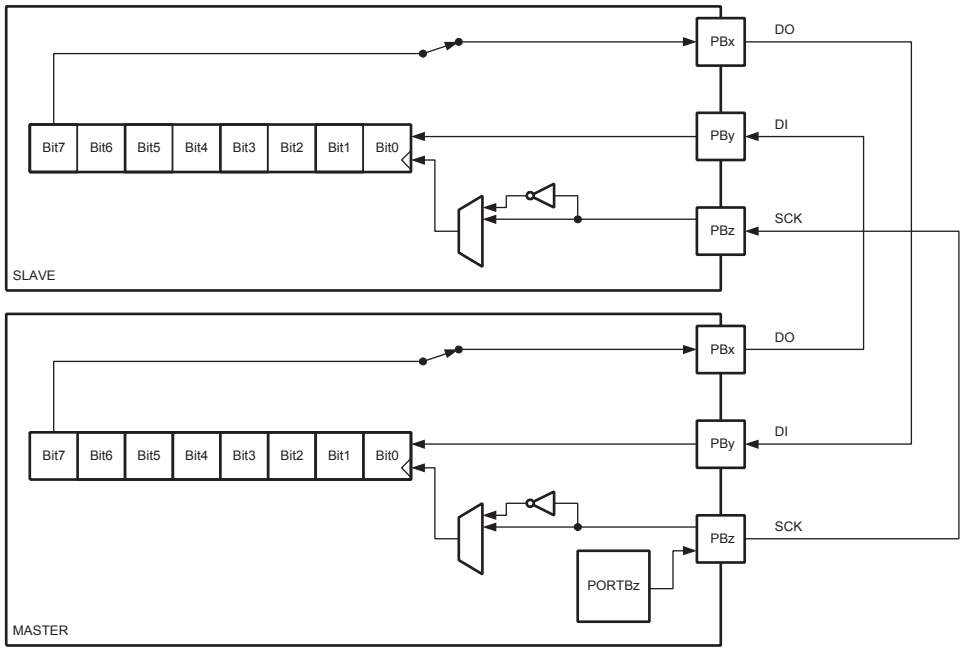

Figure 40 shows two USI units operating in Three-wire mode, one as master and one as slave. The two shift Registers are interconnected in such way that after eight SCK clocks, the data in each register are interchanged. The same clock also increments the USI's 4-bit counter. The Counter Overflow (interrupt) flag, or USIOIF, can therefore be used to determine when a transfer is completed. The clock is generated by the master device software by toggling the PB2 pin via the PORTB Register or by writing a one to the USITC bit in USICR.

Figure 41. Three-wire Mode, Timing Diagram

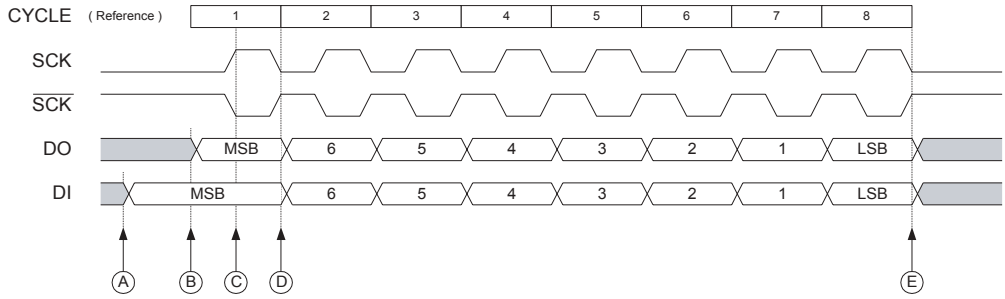

The Three-wire mode timing is shown in Figure 41. At the top of the figure is a SCK cycle reference. One bit is shifted into the USI Shift Register (USIDR) for each of these cycles. The SCK timing is shown for both external clock modes. In external clock mode 0 (USICS0 = 0), DI is sampled at positive edges, and DO is changed (Data Register is

shifted by one) at negative edges. External clock mode 1 (USICS0 = 1) uses the opposite edges versus mode 0, i.e., samples data at negative and changes the output at positive edges. The USI clock modes corresponds to the SPI data mode 0 and 1.

Referring to the timing diagram (Figure 41.), a bus transfer involves the following steps:

1. The slave device and master device sets up its data output and, depending on the protocol used, enables its output driver (mark A and B). The output is set up by writing the data to be transmitted to the serial Data Register. Enabling of the output is done by setting the corresponding bit in the port data direction register (DDRB2). Note that point A and B does not have any specific order, but both must be at least one half SCK cycle before point C where the data is sampled. This must be done to ensure that the data setup requirement is satisfied. The 4-bit counter is reset to zero.
2. The master generates a clock pulse by software toggling the SCK line twice (C and D). The bit value on the slave and master's data input (DI) pin is sampled by the USI on the first edge (C), and the data output is changed on the opposite edge (D). The 4-bit counter will count both edges.
3. Step 2. is repeated eight times for a comlpete register (byte) transfer.
4. After eight clock pulses (i.e., 16 clock edges) the counter will overflow and indicate that the transfer is completed. The data bytes transferred must now be processed before a new transfer can be initiated. The overflow interrupt will wake up the processor if it is set to Idle mode. Depending of the protocol used the slave device can now set its output to high impedance.

SPI Master Operation Example

The following code demonstrates how to use the USI module as a SPI master:

```
SPITransfer:
    out     USIDR,r16
    ldi     r16,(1<<USIOIF)
    out     USISR,r16
    ldi     r16,(1<<USIWM0)+(1<<USICS1)+(1<<USICLK)+(1<<USITC)
SPITransfer_loop:
    out     USICR,r16
    sbis    USISR,USIOIF
    rjmp    SPITransfer_loop
    in      r16,USIDR
    ret
```

The code is size optimized using only 8 instructions (+ ret). The code example assumes that the DO and SCK pins are enabled as output in the DDRB Register. The value stored in register r16 prior to the function is called is transferred to the slave device, and when the transfer is completed the data received from the slave is stored back into the r16 register.

The second and third instructions clears the USI Counter Overflow Flag and the USI counter value. The fourth and fifth instruction set Three-wire mode, positive edge Shift Register clock, count at USITC strobe, and toggle SCK (PORTB2). The loop is repeated 16 times.

The following code demonstrates how to use the USI module as a SPI Master with maximum speed (fsck = fck/2):

```
SPITransfer_Fast:

    out     USIDR,r16
    ldi     r16,(1<<USIWM0)+(0<<USICS0)+(1<<USITC)
    ldi     r17,(1<<USIWM0)+(0<<USICS0)+(1<<USITC)+(1<<USICLK)

    out     USICR,r16 ; MSB
    out     USICR,r17
    out     USICR,r16
    out     USICR,r17
    out     USICR,r16
    out     USICR,r17
    out     USICR,r16
    out     USICR,r17
    out     USICR,r16
    out     USICR,r17
    out     USICR,r16
    out     USICR,r17
    out     USICR,r16
    out     USICR,r17
    out     USICR,r16 ; LSB
    out     USICR,r17

    in      r16,USIDR
ret
```

SPI Slave Operation Example

The following code demonstrates how to use the USI module as a SPI slave:

```
init:
    ldi     r16,(1<<USIWM0)+(1<<USICS1)
    out     USICR,r16
...
SlaveSPITransfer:
    out     USIDR,r16
    ldi     r16,(1<<USIOIF)
    out     USISR,r16
SlaveSPITransfer_loop:
    sbis    USISR,USIOIF
    rjmp    SlaveSPITransfer_loop
    in      r16,USIDR
    ret
```

The code is size optimized using only 8 instructions (+ ret). The code example assumes that the DO is configured as output and SCK pin is configured as input in the DDRB Register. The value stored in register r16 prior to the function is called is transferred to the master device, and when the transfer is completed the data received from the master is stored back into the r16 register.

Note that the first two instructions is for initialization only and needs only to be executed once.These instructions sets Three-wire mode and positive edge Shift Register clock. The loop is repeated until the USI Counter Overflow Flag is set.

Two-wire Mode

The USI Two-wire mode is compliant to the Inter IC (TWI) bus protocol, but without slew rate limiting on outputs and input noise filtering. Pin names used by this mode are SCL and SDA.

Figure 42. Two-wire Mode Operation, Simplified Diagram

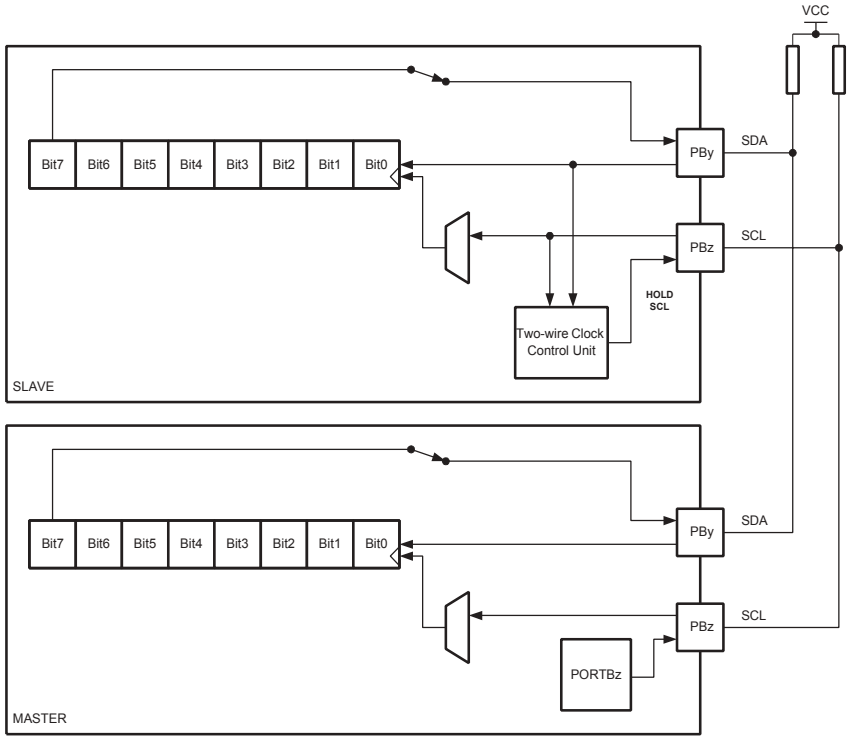

Figure 42 shows two USI units operating in Two-wire mode, one as master and one as slave. It is only the physical layer that is shown since the system operation is highly dependent of the communication scheme used. The main differences between the master and slave operation at this level, is the serial clock generation which is always done by the master, and only the slave uses the clock control unit. Clock generation must be implemented in software, but the shift operation is done automatically by both devices. Note that only clocking on negative edge for shifting data is of practical use in this mode. The slave can insert wait states at start or end of transfer by forcing the SCL clock low. This means that the master must always check if the SCL line was actually released after it has generated a positive edge.

Since the clock also increments the counter, a counter overflow can be used to indicate that the transfer is completed. The clock is generated by the master by toggling the PB2 pin via the PORTB Register.

The data direction is not given by the physical layer. A protocol, like the one used by the TWI-bus, must be implemented to control the data flow.

Figure 43. Two-wire Mode, Typical Timing Diagram

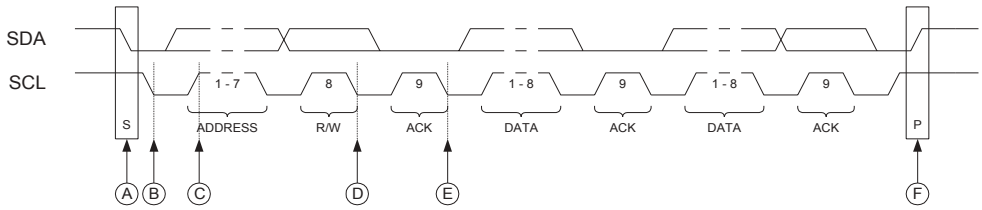

Referring to the timing diagram (Figure 43.), a bus transfer involves the following steps:

1. The a start condition is generated by the master by forcing the SDA low line while the SCL line is high (A). SDA can be forced low either by writing a zero to bit 7 of the Shift Register, or by setting the PORTB0 bit to zero. Note that DDRB0 must be set to one for the output to be enabled. The slave device's start detector logic (Figure 44.) detects the start condition and sets the USISIF flag. The flag can generate an interrupt if necessary.
2. In addition, the start detector will hold the SCL line low after the master has forced an negative edge on this line (B). This allows the slave to wake up from sleep or complete its other tasks, before setting up the Shift Register to receive the address by clearing the start condition flag and reset the counter.
3. The master set the first bit to be transferred and releases the SCL line (C). The slave samples the data and shift it into the serial register at the positive edge of the SCL clock.
4. After eight bits are transferred containing slave address and data direction (read or write), the slave counter overflows and the SCL line is forced low (D). If the slave is not the one the master has addressed it releases the SCL line and waits for a new start condition.
5. If the slave is addressed it holds the SDA line low during the acknowledgment cycle before holding the SCL line low again (i.e., the Counter Register must be set to 14 before releasing SCL at (D)). Depending of the R/W bit the master or slave enables its output. If the bit is set, a master read operation is in progress (i.e., the slave drives the SDA line) The slave can hold the SCL line low after the acknowledge (E).
6. Multiple bytes can now be transmitted, all in same direction, until a stop condition is given by the master (F). Or a new start condition is given.

If the slave is not able to receive more data it does not acknowledge the data byte it has last received. When the master does a read operation it must terminate the operation by force the acknowledge bit low after the last byte transmitted.

Figure 44. Start Condition Detector, Logic Diagram

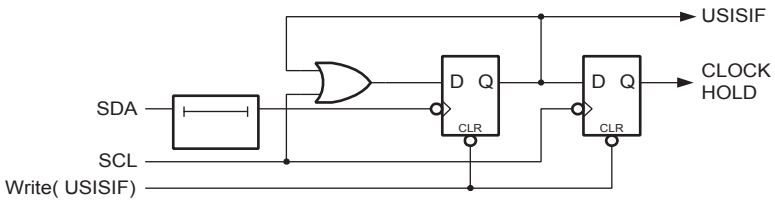

Start Condition Detector

The start condition detector is shown in Figure 44. The SDA line is delayed (in the range of 50 to 300 ns) to ensure valid sampling of the SCL line. The start condition detector is only enabled in Two-wire mode.

The start condition detector is working asynchronously and can therefore wake up the processor from the Power-down sleep mode. However, the protocol used might have restrictions on the SCL hold time. Therefore, when using this feature in this case the oscillator start-up time set by the CKSEL Fuses (see “Clock Systems and their Distribution” on page 25) must also be taken into the consideration. Refer to the description of “Bit 7 – USISIF: Start Condition Interrupt Flag” on page 64 for further details.

Alternative USI Usage

When the USI unit is not used for serial communication, it can be set up to do alternative tasks due to its flexible design.

Half-duplex Asynchronous Data Transfer

By utilizing the Shift Register in Three-wire mode, it is possible to implement a more compact and higher performance UART than by software only.

4-bit Counter

The 4-bit counter can be used as a stand-alone counter with overflow interrupt. Note that if the counter is clocked externally, both clock edges will generate an increment.

12-bit Timer/Counter

Combining the USI 4-bit counter and Timer/Counter0 allows them to be used as a 12-bit counter.

Edge Triggered External Interrupt

By setting the counter to maximum value (F) it can function as an additional external interrupt. The overflow flag and interrupt enable bit are then used for the external interrupt. This feature is selected by the USICS1 bit.

Software Interrupt

The counter overflow interrupt can be used as a software interrupt triggered by a clock strobe.

Analog Comparator

The Analog Comparator compares the input values on the positive pin PA6 (AIN0) and negative pin PA7 (AIN1). When the voltage on the positive pin PA6 (AIN0) is higher than the voltage on the negative pin PA7 (AIN1), the Analog Comparator Output, ACO is set (one). The comparator's output can trigger a separate interrupt, exclusive to the Analog Comparator. The user can select Interrupt triggering on comparator output rise, fall or toggle. A block diagram of the comparator and its surrounding logic is shown in the Figure 45.

Figure 45. Analog Comparator Block Diagram

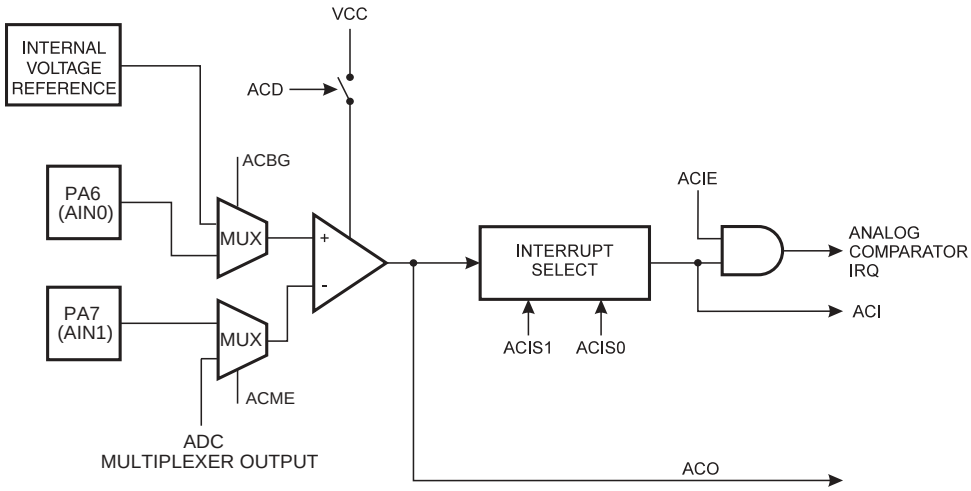

Analog Comparator Control and Status Register – ACSR

Bit	7	6	5	4	3	2	1	0	
$08 ($28)	**ACD**	**ACBG**	**ACO**	**ACI**	**ACIE**	**ACME**	**ACIS1**	**ACIS0**	**ACSR**
Read/Write	R/W	R/W	R	R/W	R/W	R/W	R/W	R/W	
Initial Value	0	0	X	0	0	0	0	0	

- **Bit 7 – ACD: Analog Comparator Disable**

When this bit is set(one), the power to the Analog Comparator is switched off. This bit can be set at any time to turn off the Analog Comparator. When changing the ACD bit, the Analog Comparator Interrupt must be disabled by clearing the ACIE bit in ACSR. Otherwise an interrupt can occur when the bit is changed.

- **Bit 6 – ACBG: Analog Comparator Bandgap Select**

When this bit is set (one), it selects internal bandgap reference voltage (1.18V) as the positive comparator input.

- **Bit 5 – ACO: Analog Comparator Output**

ACO is directly connected to the comparator output.

- **Bit 4 – ACI: Analog Comparator Interrupt Flag**

This bit is set (one) when a comparator output event triggers the interrupt mode defined by ACI1 and ACI0. The Analog Comparator Interrupt routine is executed if the ACIE bit is set (one) and the I-bit in SREG is set (one). ACI is cleared by hardware when executing the corresponding interrupt handling vector. Alternatively, ACI is cleared by writing a logic one to the flag.

- **Bit 3 – ACIE: Analog Comparator Interrupt Enable**

When the ACIE bit is set (one) and the I-bit in the Status Register is set (one), the Analog Comparator interrupt is activated. When cleared (zero), the interrupt is disabled.

- **Bit 2 – ACME: Analog Comparator Multiplexer Enable**

When the ACME bit is set (one) and the ADC is switched off (ADEN in ADCSR is zero), MUX3...0 in ADMUX select the input pin to replace the negative input to the Analog Comparator, as shown in Table 33 on page 76. If ACME is cleared (zero) or ADEN is set (one), PA7(AIN1) is applied to the negative input to the Analog Comparator.

- **Bits 1, 0 – ACIS1, ACIS0: Analog Comparator Interrupt Mode Select**

These bits determine which comparator events that trigger the Analog Comparator interrupt. The different settings are shown in Table 32.

Table 32. ACIS1/ACIS0 Settings(1)

ACIS1	ACIS0	Interrupt Mode
0	0	Comparator Interrupt on Output Toggle
0	1	Reserved
1	0	Comparator Interrupt on Falling Output Edge
1	1	Comparator Interrupt on Rising Output Edge

Note: 1. When changing the ACIS1/ACIS0 bits, the Analog Comparator Interrupt must be disabled by clearing its Interrupt Enable bit in the ACSR Register. Otherwise an interrupt can occur when the bits are changed.

Table 33. Analog Comparator Input Selection[1]

ACME	ADEN	MUX3...0[3]	Analog Comparator Negative Input
0	X	XXXX	AIN1
1	1	XXXX	AIN1
1	0	0000	ADC0
1	0	0001	ADC1
1	0	0010	ADC2
1	0	0011	ADC3
1	0	0100	ADC4
1	0	0101	ADC5
1	0	0110	ADC6[2]
1	0	0111	ADC7[2]
1	0	1000	ADC8
1	0	1001	ADC9
1	0	1010	ADC10
1	0	1011	Undefined
1	0	1100	Undefined
1	0	1101	Undefined
1	0	1110	Undefined
1	0	1111	Undefined

Notes:
1. MUX4 does not affect Analog Comparator input selection.
2. Pin change interrupt on PA6 and PA7 is disabled if the Analog Comparator is enabled. This happens regardless of whether AIN1 or AIN0 has been replaced as inputs to the Analog Comparator.
3. The MUX3...0 selections go into effect after one clock cycle delay.

Analog to Digital Converter

Features

- **10-bit Resolution**
- **±2 LSB Absolute Accuracy**
- **0.5 LSB Integral Non-linearity**
- **Optional Offset Cancellation**
- **65 - 260 µs Conversion Time**
- **11 Multiplexed Single Ended Input Channels**
- **8 Differential Input Channels**
- **7 Differential Input Channels with Optional Gain of 20x**
- **Optional Left Adjustment for ADC Result Readout**
- **0 - AVCC ADC Input Voltage Range**
- **Selectable ADC Reference Voltage**
- **Free Running or Single Conversion Mode**
- **Interrupt on ADC Conversion Complete**
- **Sleep Mode Noise Canceler**

The ATtiny26(L) features a 10-bit successive approximation ADC. The ADC is connected to an 11-channel Analog Multiplexer which allows eight differential voltage input combinations or 11 single-ended voltage inputs constructed from seven pins from Port A and four pins from Port B. Seven of the differential inputs are equipped with a programmable gain stage, providing amplification steps of 0 dB (1x) and 26 dB (20x) on the differential input voltage before the A/D conversion. There are four groups of three differential analog input channel selections. All input channels in each group share a common negative terminal, while another ADC input can be selected as the positive input terminal. The single-ended voltage inputs refer to 0V (GND).

The ADC contains a Sample and Hold Amplifier which ensures that the input voltage to the ADC is held at a constant level during conversion. A block diagram of the ADC is shown in Figure 46.

The ADC has an analog supply voltage pin, AVCC. The voltage on AVCC must not differ more than ±0.3V from V_{CC}. See the paragraph “ADC Noise Canceling Techniques” on page 88 on how to connect these pins.

An internal reference voltage of nominally 2.56V is provided On-chip, and this reference may be externally decoupled at the AREF pin by a capacitor.

Figure 46. Analog to Digital Converter Block Schematic

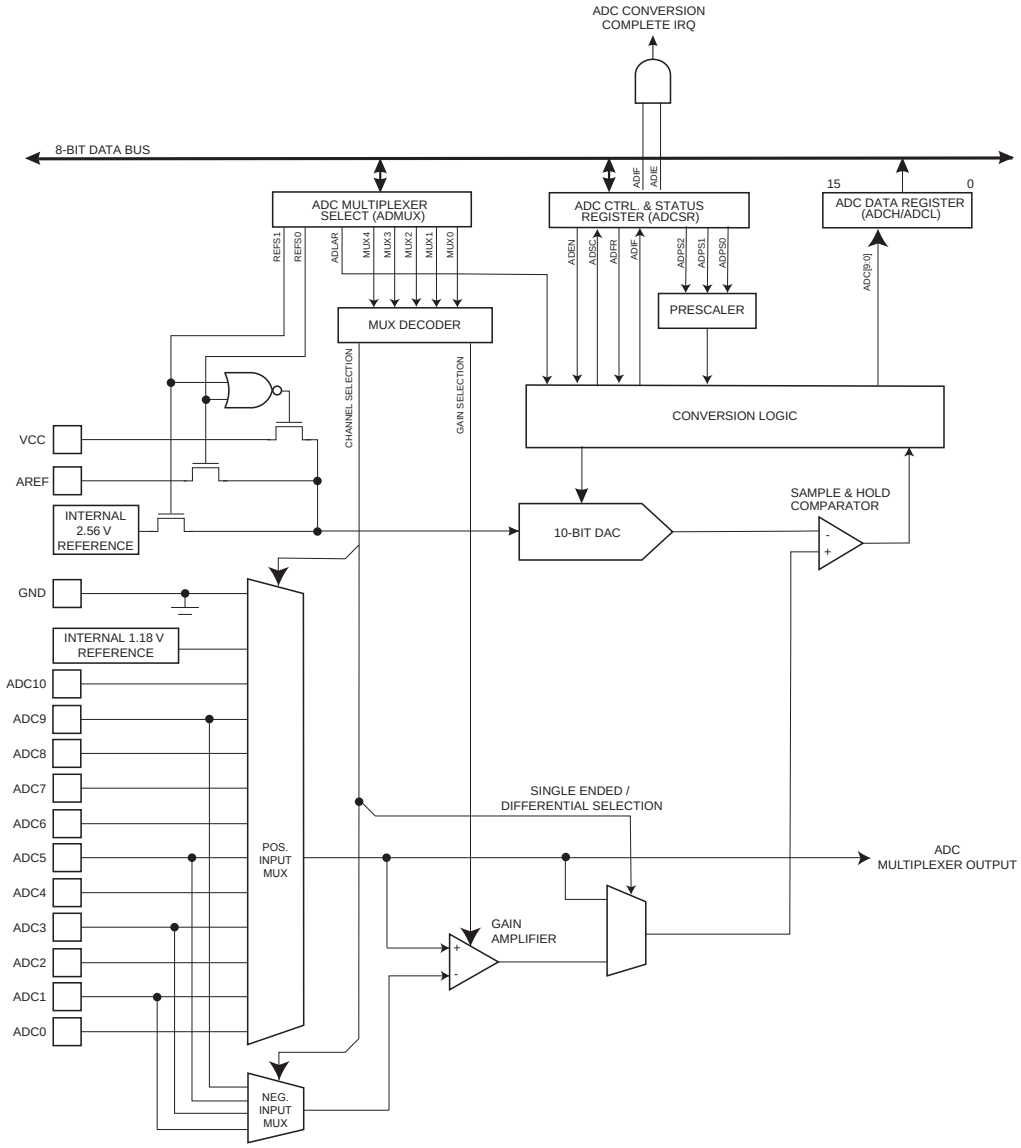

Operation

The ADC converts an analog input voltage to a 10-bit digital value through successive approximation. The minimum value represents GND and the maximum value represents the voltage on the AREF pin minus 1 LSB. Optionally, AVCC or and internal 2.56V reference voltage may be connected to the AREF pin by writing to the REFS bits in ADMUX. The internal voltage reference may thus be decoupled by an external capacitor at the AREF pin to improve noise immunity.

The analog input channel and differential gain are selected by writing to the MUX bits in ADMUX. Any of the 11 ADC input pins ADC10..0, as well as GND and a fixed bandgap voltage reference of nominally 1.18V (V_{BG}), can be selected as single ended inputs to the ADC. A selection of ADC input pins can be selected as positive and negative inputs to the differential gain amplifier.

If differential channels are selected, the differential gain stage amplifies the voltage difference between the selected input channel pair by the selected gain factor. Note that the voltage on the positive input terminal must be higher than on the negative input ter-

minal, otherwise the gain stage will saturate at 0V (GND). This amplified value then becomes the analog input to the ADC. If single ended channels are used, the gain amplifier is bypassed altogether.

The ADC can operate in two modes – Single Conversion and Free Running mode. In Single Conversion mode, each conversion will have to be initiated by the user. In Free Running mode, the ADC is constantly sampling and updating the ADC Data Register. The ADFR bit in ADCSR selects between the two available modes.

The ADC is enabled by setting the ADC Enable bit, ADEN in ADCSR. Voltage reference and input channel selections will not go into effect until ADEN is set. The ADC does not consume power when ADEN is cleared, so it is recommended to switch off the ADC before entering power saving sleep modes.

A conversion is started by writing a logical one to the ADC Start Conversion bit, ADSC. This bit stays high as long as the conversion is in progress and will be set to zero by hardware when the conversion is completed. If a different data channel is selected while a conversion is in progress, the ADC will finish the current conversion before performing the channel change.

The ADC generates a 10-bit result, which is presented in the ADC Data Registers, ADCH and ADCL. By default, the result is presented right adjusted, but can optionally be presented left adjusted by setting the ADLAR bit in ADMUX.

If the result is left adjusted and no more than 8-bit precision is required, it is sufficient to read ADCH. Otherwise, ADCL must be read first, then ADCH, to ensure that the content of the data registers belongs to the same conversion. Once ADCL is read, ADC access to data registers is blocked. This means that if ADCL has been read, and a conversion completes before ADCH is read, neither register is updated and the result from the conversion is lost. When ADCH is read, ADC access to the ADCH and ADCL Registers is re-enabled.

The ADC has its own interrupt which can be triggered when a conversion completes. When ADC access to the Data Registers is prohibited between reading of ADCH and ADCL, the interrupt will trigger even if the result is lost.

Prescaling and Conversion Timing

Figure 47. ADC Prescaler

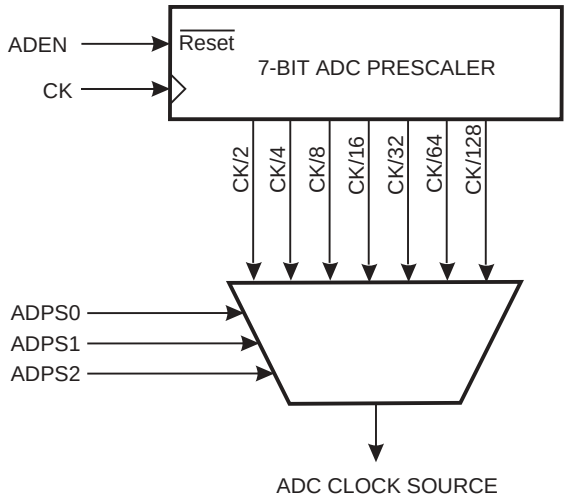

The successive approximation circuitry requires an input clock frequency between 50 kHz and 200 kHz. The ADC module contains a prescaler, which divides the system clock to an acceptable ADC clock frequency.

The ADPS bits in ADCSR are used to generate a proper ADC clock input frequency from any chip clock frequency above 100 kHz. The prescaler starts counting from the moment the ADC is switched on by setting the ADEN bit in ADCSR. The prescaler keeps running for as long as the ADEN bit is set, and is continuously reset when ADEN is low.

When initiating a conversion by setting the ADSC bit in ADCSR, the conversion starts at the following rising edge of the ADC clock cycle. If differential channels are selected, the conversion will only start at every other rising edge of the ADC clock cycle after ADEN was set.

A normal conversion takes 13 ADC clock cycles. In certain situations, the ADC needs more clock cycles to initialization and minimize offset errors. Extended conversions take 25 ADC clock cycles and occur as the first conversion after the ADC is switched on (ADEN in ADCSR is set).

Special care should be taken when changing differential channels. Once a differential channel has been selected, the gain stage may take as much as 125 µs to stabilize to the new value. Thus conversions should not be started within the first 125 µs after selecting a new differential channel. Alternatively, conversions results obtained within this period should be discarded. The same settling time should be observed for the first differential conversion after changing ADC reference (by changing the REFS1:0 bits in ADMUX).

The actual sample-and-hold takes place 1.5 ADC clock cycles after the start of a normal conversion and 13.5 ADC clock cycles after the start of an extended conversion. When a conversion is complete, the result is written to the ADC Data Registers, and ADIF is set. In Single Conversion mode, ADSC is cleared simultaneously. The software may then set ADSC again, and a new conversion will be initiated on the first rising ADC clock edge. In Free Running mode, a new conversion will be started immediately after the conversion completes, while ADSC remains high. Using Free Running mode and an ADC clock frequency of 200 kHz gives the lowest conversion time, 65 µs, equivalent to 15 kSPS. For a summary of conversion times, see Table 34.

Figure 48. ADC Timing Diagram, Extended Conversion (Single Conversion Mode)

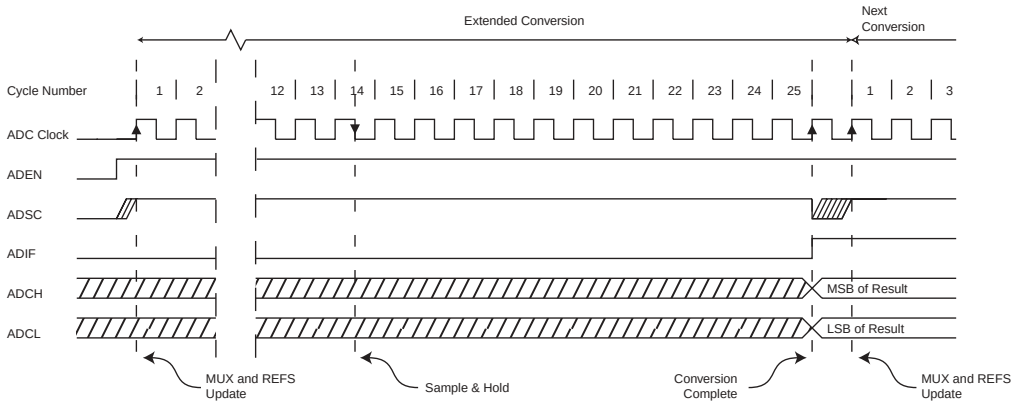

Figure 49. ADC Timing Diagram, Single Conversion

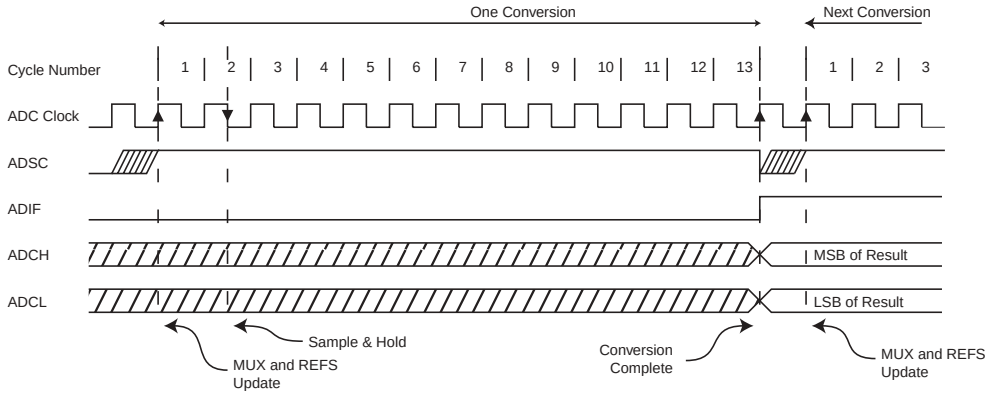

Figure 50. ADC Timing Diagram, Free Running Conversion

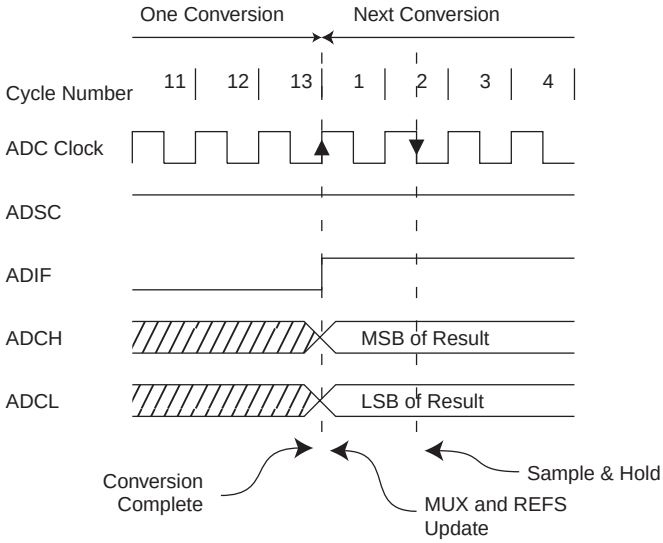

Table 34. ADC Conversion Time

Condition	Sample & Hold (Cycles from Start of Conversion)	Conversion Time (Cycles)	Conversion Time (µs)
Extended conversion	13.5	25	125 - 500
Normal conversions	1.5	13	65 - 260

ADC Noise Canceler Function

The ADC features a noise canceler that enables conversion during ADC Noise Reduction mode (see “Power Management and Sleep Modes” on page 41) to reduce noise induced from the CPU core and other I/O peripherals. If other I/O peripherals must be active during conversion, this mode works equivalently for Idle mode. To make use of this feature, the following procedure should be used:

1. Make sure that the ADC is enabled and is not busy converting. Single Conversion mode must be selected and the ADC conversion complete interrupt must be enabled.
   ADEN = 1
   ADSC = 0
   ADFR = 0
   ADIE = 1
2. Enter ADC Noise Reduction mode (or Idle mode). The ADC will start a conversion once the CPU has been halted.
3. If no other interrupts occur before the ADC conversion completes, the ADC interrupt will wake up the CPU and execute the ADC Conversion Complete interrupt routine.

ADC Conversion Result

After the conversion is complete (ADIF is high), the conversion result can be found in the ADC Result Registers (ADCL, ADCH).

For single ended conversion, the result is

$$ADC = \frac{V_{IN} \cdot 1024}{V_{REF}}$$

where V_{IN} is the voltage on the selected input pin and V_{REF} the selected voltage reference (see Table 36 on page 84 and Table 37 on page 85). 0x000 represents analog ground, and 0x3FF represents the selected reference voltage minus one LSB.

If differential channels are used, the result is

$$ADC = \frac{(V_{POS} - V_{NEG}) \cdot GAIN \cdot 1024}{V_{REF}}$$

where V_{POS} is the voltage on the positive input pin, V_{NEG} the voltage on the negative input pin, GAIN the selected gain factor, and V_{REF} the selected voltage reference. Keep in mind that V_{POS} must be higher than V_{NEG}, otherwise, the ADC value will saturate at 0x000. Figure 51 shows the decoding of the differential input range.

Table 35 shows the resulting output codes if the differential input channel pair (ADCn - ADCm) is selected with a gain of GAIN and a reference voltage of V_{REF}.

Figure 51. Differential Measurement Range

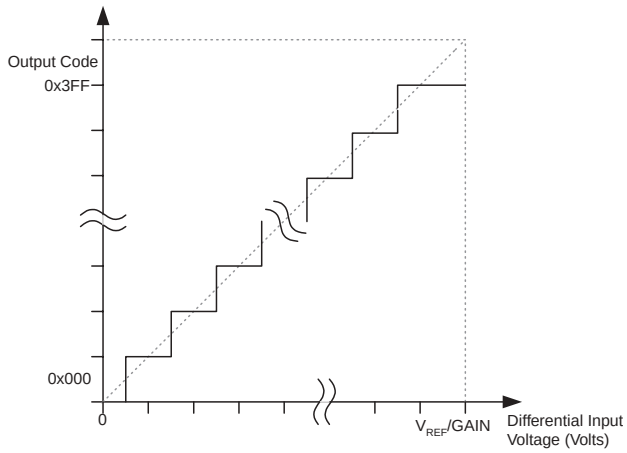

Table 35. Correlation Between Input Voltage and Output Codes

V_{ADCn}	Read code	Corresponding decimal value
$V_{ADCm} + V_{REF}$ /GAIN	0x3FF	1023
V_{ADCm} + (1023/1024) V_{REF} /GAIN	0x3FF	1023
V_{ADCm} + (1022/1024) V_{REF} /GAIN	0x3FE	1022
...	...	...
V_{ADCm} + (1/1024) V_{REF} /GAIN	0x001	1
V_{ADCm}	0x000	0

Example:

ADMUX = 0xEB (ADC0 - ADC1, 20x gain, 2.56V reference, left adjusted result)

Voltage on ADC0 is 400 mV, voltage on ADC1 is 300 mV.

ADCR = 1024 * 20 * (400 - 300) / 2560 = 800 = 0x320

ADCL will thus read 0x00, and ADCH will read 0xC8. Writing zero to ADLAR right adjusts the result: ADCL = 0x20, ADCH = 0x03.

ADC Multiplexer Selection Register – ADMUX

Bit	7	6	5	4	3	2	1	0	
$07 ($27)	**REFS1**	**REFS0**	**ADLAR**	**MUX4**	**MUX3**	**MUX2**	**MUX1**	**MUX0**	**ADMUX**
Read/Write	R/W	R/W	R/W	R/W	R/W	R/W	R/W	R/W	
Initial Value	0	0	0	0	0	0	0	0	

- **Bit 7, 6 – REFS1, REFS0: Reference Selection Bits**

These bits select the voltage reference for the ADC, as shown in Table 36. If these bits are changed during a conversion, the change will not go in effect until this conversion is complete (ADIF in ADCSR is set). The user should disregard the first conversion result after changing these bits to obtain maximum accuracy. If differential channels are used, using AVCC or an external AREF higher than (AVCC - 0.2V) is not recommended, as this will affect ADC accuracy. The internal voltage reference may not be used if an external reference voltage is being applied to the AREF pin.

Table 36. Voltage Reference Selections for ADC

REFS1	REFS0	Voltage Reference Selection
0	0	AVCC
0	1	AREF (PA3), Internal Vref turned off.
1	0	Internal Voltage Reference (2.56 V), AREF pin (PA3) not connected.
1	1	Internal Voltage Reference (2.56 V) with external capacitor at AREF pin (PA3).

- **Bit 5 – ADLAR: ADC Left Adjust Result**

The ADLAR bit affects the presentation of the ADC conversion result in the ADC Data Register. If ADLAR is cleared, the result is right adjusted. If ADLAR is set, the result is left adjusted. Changing the ADLAR bit will affect the ADC Data Register immediately, regardless of any ongoing conversions. For a complete description of this bit, see “ADC Data Register – ADCL and ADCH” on page 87.

- **Bits 4..0 – MUX4..MUX0: Analog Channel and Gain Selection Bits**

The value of these bits selects which combination of analog inputs are connected to the ADC. These bits also select the gain for the differential channels. See Table 37 for details. If these bits are changed during a conversion, the change will not go in effect until this conversion is complete (ADIF in ADCSR is set).

Table 37. Input Channel and Gain Selections

MUX4..0	Single Ended Input	Positive Differential Input	Negative Differential Input	Gain
00000	ADC0	N/A		
00001	ADC1			
00010	ADC2			
00011	ADC3			
00100	ADC4			
00101	ADC5			
00110	ADC6			
00111	ADC7			
01000	ADC8			
01001	ADC9			
01010	ADC10			
01011	N/A	ADC0	ADC1	20x
01100		ADC0	ADC1	1x
01101(1)		ADC1	ADC1	20x
01110		ADC2	ADC1	20x
01111		ADC2	ADC1	1x
10000	N/A	ADC2	ADC3	1x
10001(1)		ADC3	ADC3	20x
10010		ADC4	ADC3	20x
10011(1)		ADC4	ADC3	1x
10100	N/A	ADC4	ADC5	20x
10101		ADC4	ADC5	1x
10110(1)		ADC5	ADC5	20x
10111		ADC6	ADC5	20x
11000		ADC6	ADC5	1x
11001	N/A	ADC8	ADC9	20x
11010		ADC8	ADC9	1x
11011(1)		ADC9	ADC9	20x
11100		ADC10	ADC9	20x
11101		ADC10	ADC9	1x
11110	1.18V (V_{BG})	N/A		
11111	0V (GND)			

Note: 1. For offset measurements only. See “Offset Compensation Schemes” on page 88.

ADC Control and Status Register – ADCSR

Bit	7	6	5	4	3	2	1	0	
$06 ($26)	**ADEN**	**ADSC**	**ADFR**	**ADIF**	**ADIE**	**ADPS2**	**ADPS1**	**ADPS0**	**ADCSR**
Read/Write	R/W	R/W	R/W	R/W	R/W	R/W	R/W	R/W	
Initial Value	0	0	0	0	0	0	0	0	

- **Bit 7 – ADEN: ADC Enable**

Writing a logical “1” to this bit enables the ADC. By clearing this bit to zero, the ADC is turned off. Turning the ADC off while a conversion is in progress, will terminate this conversion.

- **Bit 6 – ADSC: ADC Start Conversion**

In Single Conversion mode, a logical “1” must be written to this bit to start each conversion. In Free Running mode, a logical “1” must be written to this bit to start the first conversion. The first time ADSC has been written after the ADC has been enabled, or if ADSC is written at the same time as the ADC is enabled, a dummy conversion will precede the initiated conversion. This dummy conversion performs initialization of the ADC.

ADSC will read as one as long as a conversion is in progress. When the conversion is complete, it returns to zero. When a dummy conversion precedes a real conversion, ADSC will stay high until the real conversion completes. Writing a 0 to this bit has no effect.

- **Bit 5 – ADFR: ADC Free Running Select**

When this bit is set (one) the ADC operates in Free Running mode. In this mode, the ADC samples and updates the Data Registers continuously. Clearing this bit (zero) will terminate Free Running mode.

- **Bit 4 – ADIF: ADC Interrupt Flag**

This bit is set (one) when an ADC conversion completes and the data registers are updated. The ADC Conversion Complete Interrupt is executed if the ADIE bit and the I-bit in SREG are set (one). ADIF is cleared by hardware when executing the corresponding interrupt handling vector. Alternatively, ADIF is cleared by writing a logical one to the flag. Beware that if doing a read-modify-write on ADCSR, a pending interrupt can be disabled. This also applies if the SBI and CBI instructions are used.

- **Bit 3 – ADIE: ADC Interrupt Enable**

When this bit is set (one) and the I-bit in SREG is set (one), the ADC Conversion Complete Interrupt is activated.

- **Bits 2..0 – ADPS2..0: ADC Prescaler Select Bits**

These bits determine the division factor between the CK frequency and the input clock to the ADC.

Table 38. ADC Prescaler Selections

ADPS2	ADPS1	ADPS0	Division Factor
0	0	0	2
0	0	1	2
0	1	0	4
0	1	1	8
1	0	0	16
1	0	1	32
1	1	0	64
1	1	1	128

ADC Data Register – ADCL and ADCH

ADLAR = 0

Bit	15	14	13	12	11	10	9	8	
$05 ($25)	–	–	–	–	–	–	ADC9	ADC8	ADCH
$04 ($24)	ADC7	ADC6	ADC5	ADC4	ADC3	ADC2	ADC1	ADC0	ADCL
	7	6	5	4	3	2	1	0	
Read/Write	R	R	R	R	R	R	R	R	
	R	R	R	R	R	R	R	R	
Initial Value	0	0	0	0	0	0	0	0	
	0	0	0	0	0	0	0	0	

ADLAR = 1

Bit	15	14	13	12	11	10	9	8	
$05 ($25)	ADC9	ADC8	ADC7	ADC6	ADC5	ADC4	ADC3	ADC2	ADCH
$04 ($24)	ADC1	ADC0	–	–	–	–	–	–	ADCL
	7	6	5	4	3	2	1	0	
Read/Write	R	R	R	R	R	R	R	R	
	R	R	R	R	R	R	R	R	
Initial Value	0	0	0	0	0	0	0	0	
	0	0	0	0	0	0	0	0	

When an ADC conversion is complete, the result is found in these two registers. The ADLAR bit in ADMUX affect the way the result is read from the registers. If ADLAR is set, the result is left adjusted. If ADLAR is cleared (default), the result is right adjusted. If the result is left adjusted and no more than 8-bit precision is required, it is sufficient to read ADCH. Otherwise, ADCL must be read first, then ADCH.

- **ADC9..0: ADC Conversion Result**

These bits represent the result from the conversion. For differential channels, this is the absolute value after gain adjustment, as indicated in Table 37 on page 85. For single ended channels, $000 represents analog ground, and $3FF represents the selected reference voltage minus one LSB.

Scanning Multiple Channels

Since change of analog channel always is delayed until a conversion is finished, the Free Running mode can be used to scan multiple channels without interrupting the converter. Typically, the ADC Conversion Complete interrupt will be used to perform the channel shift. However, the user should take the following fact into consideration:

The interrupt triggers once the result is ready to be read. In Free Running mode, the next conversioin will start immediately when the interrupt triggers. If ADMUX is changed after the interrupt triggers, the next conversion has already started, and the old setting is used.

ADC Noise Canceling Techniques

Digital circuitry inside and outside the ATtiny26(L) generates EMI which might affect the accuracy of analog measurements. If conversion accuracy is critical, the noise level can be reduced by applying the following techniques:

1. The analog part of the ATtiny26(L) and all analog components in the application should have a separate analog ground plane on the PCB. This ground plane is connected to the digital ground plane via a single point on the PCB.
2. Keep analog signal paths as short as possible. Make sure analog tracks run over the analog ground plane, and keep them well away from high-speed switching digital tracks.
3. The AVCC pin on the ATtiny26(L) should be connected to the digital V_{CC} supply voltage via an LC network as shown in Figure 52.
4. Use the ADC noise canceler function to reduce induced noise from the CPU.
5. If some pins are used as digital outputs, it is essential that these do not switch while a conversion is in progress in that port.

Offset Compensation Schemes

All active gain stages and differential-to-single-ended stages in front of the ADC have a built-in offset cancellation circuitry that nulls the offset of these stages as much as possible.

In the case of unity gain differential measurements, the remaining worst case offset in the differential to single-ended stage is less than 5 mV offset (typically 3 mV), or two LSBs.

In the case of 20x gain differential measurements, the remaining worst case offset error is in the range of 10 mV in the ADC conversion result. If the internal voltage reference (2.56V) is used during conversion of differential channels, one LSB of the 10-bit ADC is 2.56 mV, i.e., the worst case error is approximately four LSBs. This error is fairly stable over short term, as temperature which is the main contributor to offset drift, varies slowly. Offset variation over the temperature range is in the order of 5 mV, i.e., approximately two LSBs.

If better offset cancellation is desired, it is possible to select the same channel for both differential input references and actually measure the offset from the complete analog path. This offset residue can then be subtracted in software from the measurement results. Using this kind of software based offset correction, offset on any channel can be reduced below one LSB.

Figure 52. ADC Power Connections

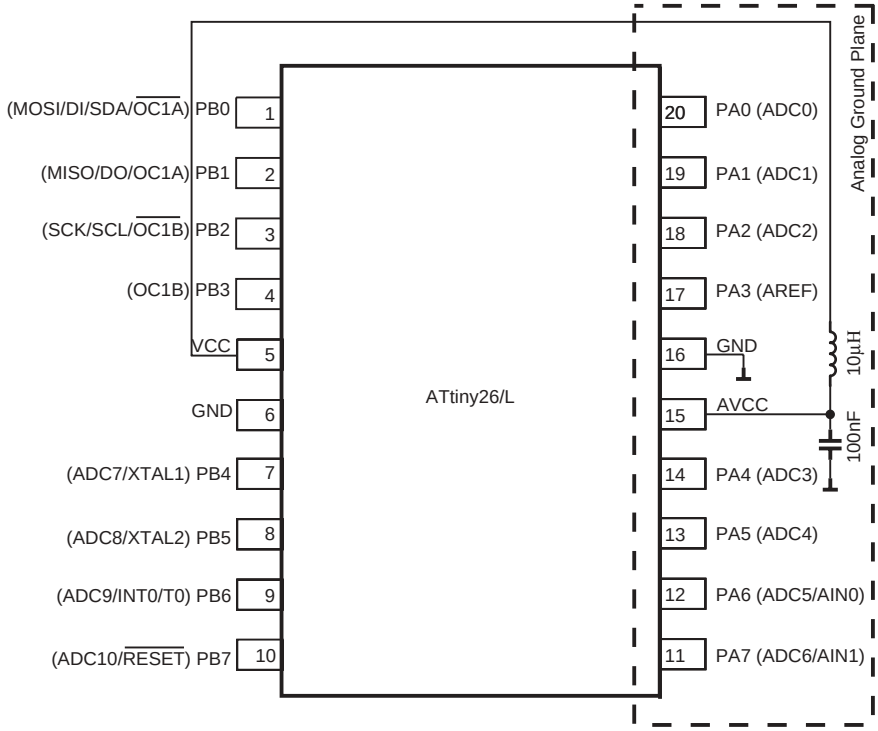

I/O Ports

Introduction

All AVR ports have true Read-Modify-Write functionality when used as general digital I/O ports. This means that the direction of one port pin can be changed without unintentionally changing the direction of any other pin with the SBI and CBI instructions. The same applies when changing drive value (if configured as output) or enabling/disabling of pull-up resistors (if configured as input). Each output buffer, except reset, has symmetrical drive characteristics with both high sink and source capability. The pin driver is strong enough to drive LED displays directly. All port pins have individually selectable pull-up resistors with a supply-voltage invariant resistance. All I/O pins have protection diodes to both V_{CC} and Ground as indicated in Figure 53.

Figure 53. I/O Pin Equivalent Schematic

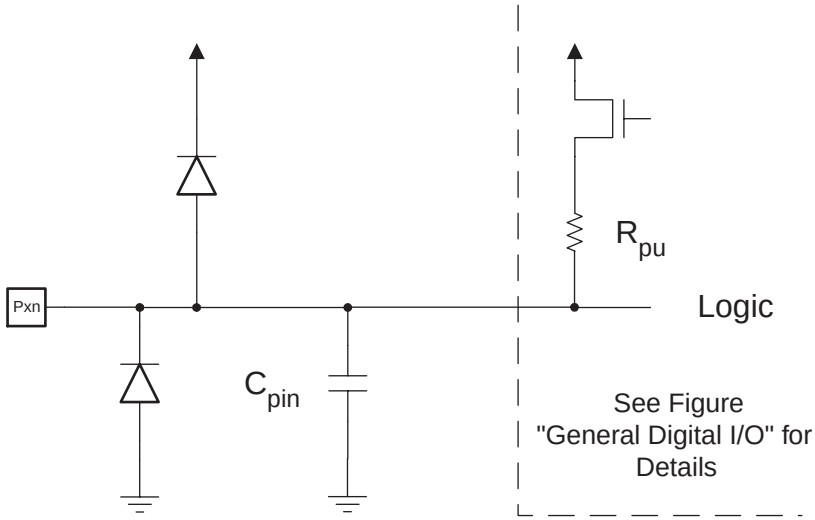

All registers and bit references in this section are written in general form. A lower case “x” represents the numbering letter for the port, and a lower case “n” represents the bit number. However, when using the register or bit defines in a program, the precise form must be used. For example, PORTB3 for bit no. 3 in Port B, here documented generally as PORTxn. The physical I/O Registers and bit locations are listed in “Register Description for I/O Ports” on page 105.

Three I/O memory address locations are allocated for each port, one each for the Data Register – PORTx, Data Direction Register – DDRx, and the Port Input Pins – PINx. The Port Input Pins I/O location is read only, while the Data Register and the Data Direction Register are read/write. In addition, the Pull-up Disable – PUD bit in MCUCR disables the pull-up function for all pins in all ports when set.

Using the I/O port as General Digital I/O is described in “Ports as General Digital I/O” on page 91. Most port pins are multiplexed with alternate functions for the peripheral features on the device. How each alternate function interferes with the port pin is described in “Alternate Port Functions” on page 95. Refer to the individual module sections for a full description of the alternate functions.

Note that enabling the alternate function of some of the port pins does not affect the use of the other pins in the port as general digital I/O.

Ports as General Digital I/O

The ports are bi-directional I/O ports with optional internal pull-ups. Figure 54 shows a functional description of one I/O-port pin, here generically called Pxn.

Figure 54. General Digital I/O(1)

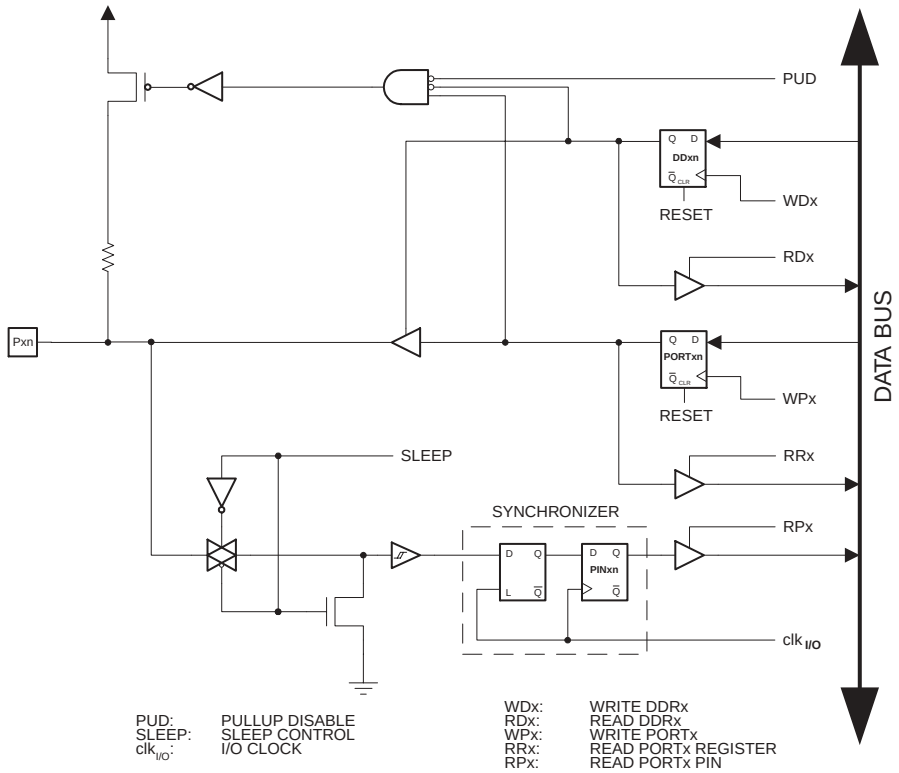

Note: 1. WPx, WDx, RRx, RPx, and RDx are common to all pins within the same port. $clk_{I/O}$, SLEEP, and PUD are common to all ports.

Configuring the Pin

Each port pin consists of 3 Register bits: DDxn, PORTxn, and PINxn. As shown in “Register Description for I/O Ports” on page 105, the DDxn bits are accessed at the DDRx I/O address, the PORTxn bits at the PORTx I/O address, and the PINxn bits at the PINx I/O address.

The DDxn bit in the DDRx Register selects the direction of this pin. If DDxn is written logic one, Pxn is configured as an output pin. If DDxn is written logic zero, Pxn is configured as an input pin.

If PORTxn is written logic one when the pin is configured as an input pin, the pull-up resistor is activated. To switch the pull-up resistor off, PORTxn has to be written logic zero or the pin has to be configured as an output pin. The port pins are tri-stated when a reset condition becomes active, even if no clocks are running.

If PORTxn is written logic one when the pin is configured as an output pin, the port pin is driven high (one). If PORTxn is written logic zero when the pin is configured as an output pin, the port pin is driven low (zero).

When switching between tri-state ({DDxn, PORTxn} = 0b00) and output high ({DDxn, PORTxn} = 0b11), an intermediate state with either pull-up enabled ({DDxn, PORTxn} = 0b01) or output low ({DDxn, PORTxn} = 0b10) must occur. Normally, the pull-up enabled state is fully acceptable, as a high-impedant environment will not notice the

difference between a strong high driver and a pull-up. If this is not the case, the PUD bit in the MCUCR Register can be set to disable all pull-ups in all ports.

Switching between input with pull-up and output low generates the same problem. The user must use either the tri-state ({DDxn, PORTxn} = 0b00) or the output high state ({DDxn, PORTxn} = 0b11) as an intermediate step.

Table 39 summarizes the control signals for the pin value.

Table 39. Port Pin Configurations

DDxn	PORTxn	PUD (in MCUCR)	I/O	Pull-up	Comment
0	0	X	Input	No	Tri-state (Hi-Z)
0	1	0	Input	Yes	Pxn will source current if ext. pulled low
0	1	1	Input	No	Tri-state (Hi-Z)
1	0	X	Output	No	Output Low (Sink)
1	1	X	Output	No	Output High (Source)

Reading the Pin Value

Independent of the setting of Data Direction bit DDxn, the port pin can be read through the PINxn Register Bit. As shown in Figure 54, the PINxn Register bit and the preceding latch constitute a synchronizer. This is needed to avoid metastability if the physical pin changes value near the edge of the internal clock, but it also introduces a delay. Figure 55 shows a timing diagram of the synchronization when reading an externally applied pin value. The maximum and minimum propagation delays are denoted $t_{pd,max}$ and $t_{pd,min}$ respectively.

Figure 55. Synchronization when Reading an Externally Applied Pin Value

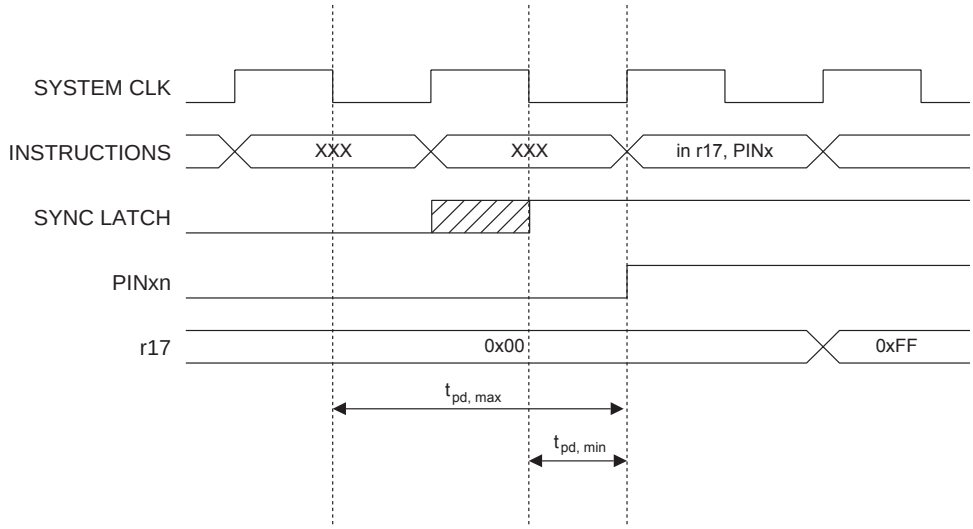

Consider the clock period starting shortly *after* the first falling edge of the system clock. The latch is closed when the clock is low, and goes transparent when the clock is high, as indicated by the shaded region of the “SYNC LATCH” signal. The signal value is latched when the system clock goes low. It is clocked into the PINxn Register at the succeeding positive clock edge. As indicated by the two arrows $t_{pd,max}$ and $t_{pd,min}$, a single

signal transition on the pin will be delayed between ½ and 1½ system clock period depending upon the time of assertion.

When reading back a software assigned pin value, a *nop* instruction must be inserted as indicated in Figure 56. The *out* instruction sets the “SYNC LATCH” signal at the positive edge of the clock. In this case, the delay t_{pd} through the synchronizer is one system clock period.

Figure 56. Synchronization when Reading a Software Assigned Pin Value

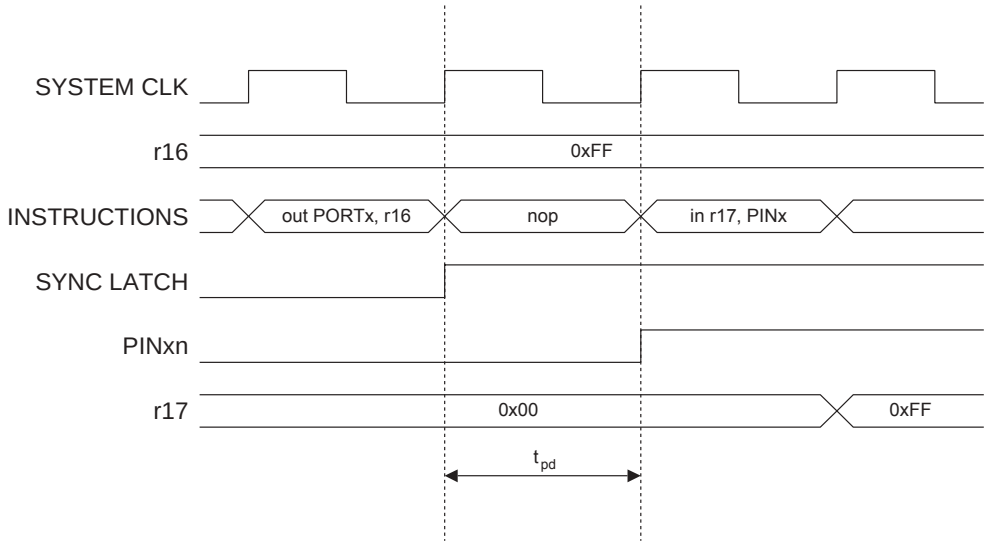

The following code example shows how to set port B pins 0 and 1 high, 2 and 3 low, and define the port pins from 4 to 7 as input with pull-ups assigned to port pins 6 and 7. The resulting pin values are read back again, but as previously discussed, a *nop* instruction is included to be able to read back the value recently assigned to some of the pins.

Assembly Code Example[1]

```
...
; Define pull-ups and set outputs high
; Define directions for port pins
ldi   r16,(1<<PB7)|(1<<PB6)|(1<<PB1)|(1<<PB0)
ldi   r17,(1<<DDB3)|(1<<DDB2)|(1<<DDB1)|(1<<DDB0)
out   PORTB,r16
out   DDRB,r17
; Insert nop for synchronization
nop
; Read port pins
in    r16,PINB
...
```

C Code Example

```
unsigned char i;
  ...
  /* Define pull-ups and set outputs high */
  /* Define directions for port pins */
  PORTB = (1<<PB7)|(1<<PB6)|(1<<PB1)|(1<<PB0);
  DDRB = (1<<DDB3)|(1<<DDB2)|(1<<DDB1)|(1<<DDB0);
  /* Insert nop for synchronization*/
  _NOP();
  /* Read port pins */
  i = PINB;
  ...
```

Note: 1. For the assembly program, two temporary registers are used to minimize the time from pull-ups are set on pins 0, 1, 6, and 7, until the direction bits are correctly set, defining bit 2 and 3 as low and redefining bits 0 and 1 as strong high drivers.

Digital Input Enable and Sleep Modes

As shown in Figure 54, the digital input signal can be clamped to ground at the input of the schmitt-trigger. The signal denoted SLEEP in the figure, is set by the MCU Sleep Controller in Power-down mode, Standby mode, and ADC Noise Reduction mode to avoid high power consumption if some input signals are left floating, or have an analog signal level close to $V_{CC}/2$.

SLEEP is overridden for port pins enabled as External Interrupt pins. If the External Interrupt Request is not enabled, SLEEP is active also for these pins. SLEEP is also overridden by various other alternate functions as described in “Alternate Port Functions” on page 95.

If a logic high level (“one”) is present on an Asynchronous External Interrupt pin configured as “Interrupt on a Rising Edge, Falling Edge, or Any Logic Change on Pin” while the external interrupt is *not* enabled, the corresponding External Interrupt Flag will be set when resuming from the above mentioned sleep modes, as the clamping in these sleep modes produces the requested logic change.

Unconnected Pins

If some pins are unused, it is recommended to ensure that these pins have a defined level. Even though most of the digital inputs are disabled in the deep sleep modes as described above, floating inputs should be avoided to reduce current consumption in all other modes where the digital inputs are enabled (Reset, Active mode, and Idle mode).

The simplest method to ensure a defined level of an unused pin, is to enable the internal pullup. In this case, the pullup will be disabled during reset. If low power consumption during reset is important, it is recommended to use an external pullup or pulldown. Connecting unused pins directly to V_{CC} or GND is not recommended, since this may cause excessive currents if the pin is accidentally configured as an output.

Alternate Port Functions

Most port pins have alternate functions in addition to being general digital I/Os. Figure 57 shows how the port pin control signals from the simplified Figure 54 can be overridden by alternate functions. The overriding signals may not be present in all port pins, but the figure serves as a generic description applicable to all port pins in the AVR microcontroller family.

Figure 57. Alternate Port Functions(1)

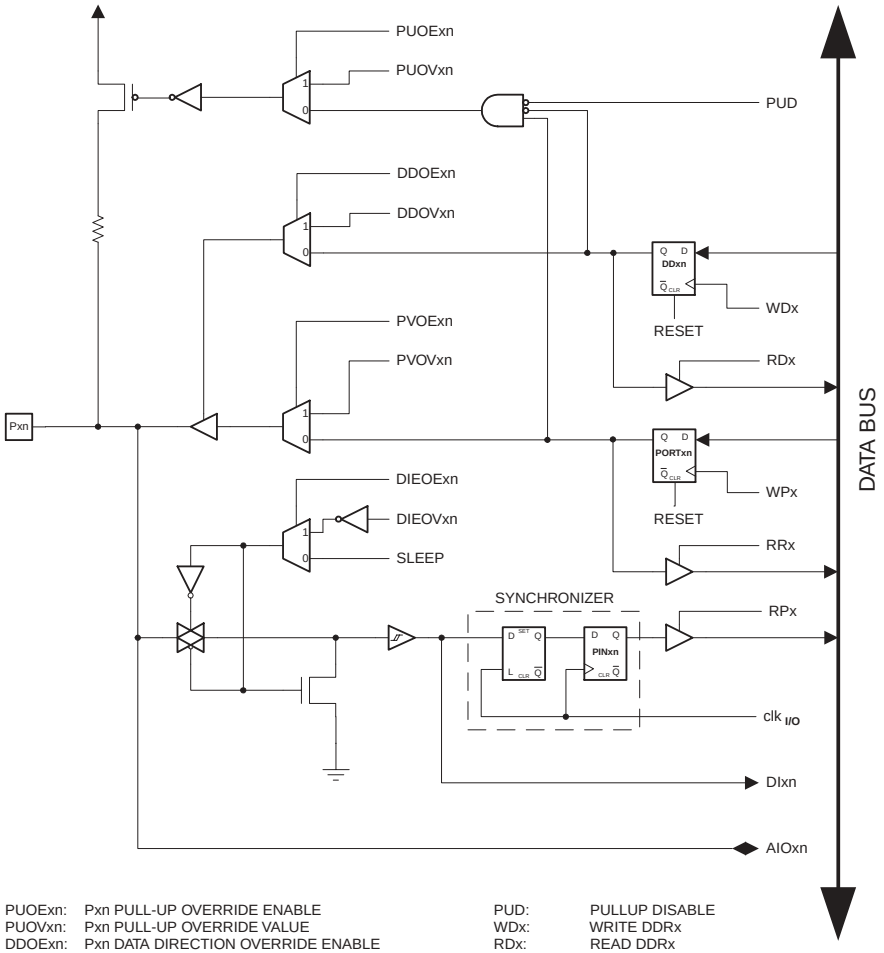

PUOExn:	Pxn PULL-UP OVERRIDE ENABLE	PUD:	PULLUP DISABLE
PUOVxn:	Pxn PULL-UP OVERRIDE VALUE	WDx:	WRITE DDRx
DDOExn:	Pxn DATA DIRECTION OVERRIDE ENABLE	RDx:	READ DDRx
DDOVxn:	Pxn DATA DIRECTION OVERRIDE VALUE	RRx:	READ PORTx REGISTER
PVOExn:	Pxn PORT VALUE OVERRIDE ENABLE	WPx:	WRITE PORTx
PVOVxn:	Pxn PORT VALUE OVERRIDE VALUE	RPx:	READ PORTx PIN
DIEOExn:	Pxn DIGITAL INPUT-ENABLE OVERRIDE ENABLE	$clk_{I/O}$:	I/O CLOCK
DIEOVxn:	Pxn DIGITAL INPUT-ENABLE OVERRIDE VALUE	DIxn:	DIGITAL INPUT PIN n ON PORTx
SLEEP:	SLEEP CONTROL	AIOxn:	ANALOG INPUT/OUTPUT PIN n ON PORTx

Note: 1. WPx, WDx, RLx, RPx, and RDx are common to all pins within the same port. $clk_{I/O}$, SLEEP, and PUD are common to all ports. All other signals are unique for each pin.

Table 40 summarizes the function of the overriding signals. The pin and port indexes from Figure 57 are not shown in the succeeding tables. The overriding signals are generated internally in the modules having the alternate function.

Table 40. Generic Description of Overriding Signals for Alternate Functions

Signal Name	Full Name	Description
PUOE	Pull-up Override Enable	If this signal is set, the pull-up enable is controlled by the PUOV signal. If this signal is cleared, the pull-up is enabled when {DDxn, PORTxn, PUD} = 0b010.
PUOV	Pull-up Override Value	If PUOE is set, the pull-up is enabled/disabled when PUOV is set/cleared, regardless of the setting of the DDxn, PORTxn, and PUD Register bits.
DDOE	Data Direction Override Enable	If this signal is set, the Output Driver Enable is controlled by the DDOV signal. If this signal is cleared, the Output driver is enabled by the DDxn Register bit.
DDOV	Data Direction Override Value	If DDOE is set, the Output Driver is enabled/disabled when DDOV is set/cleared, regardless of the setting of the DDxn Register bit.
PVOE	Port Value Override Enable	If this signal is set and the Output Driver is enabled, the port value is controlled by the PVOV signal. If PVOE is cleared, and the Output Driver is enabled, the port Value is controlled by the PORTxn Register bit.
PVOV	Port Value Override Value	If PVOE is set, the port value is set to PVOV, regardless of the setting of the PORTxn Register bit.
DIEOE	Digital Input Enable Override Enable	If this bit is set, the Digital Input Enable is controlled by the DIEOV signal. If this signal is cleared, the Digital Input Enable is determined by MCU-state (Normal mode, sleep modes).
DIEOV	Digital Input Enable Override Value	If DIEOE is set, the Digital Input is enabled/disabled when DIEOV is set/cleared, regardless of the MCU state (Normal mode, sleep modes).
DI	Digital Input	This is the Digital Input to alternate functions. In the figure, the signal is connected to the output of the schmitt trigger but before the synchronizer. Unless the Digital Input is used as a clock source, the module with the alternate function will use its own synchronizer.
AIO	Analog Input/output	This is the Analog Input/Output to/from alternate functions. The signal is connected directly to the pad, and can be used bidirectionally.

The following subsections shortly describes the alternate functions for each port, and relates the overriding signals to the alternate function. Refer to the alternate function description for further details.

MCU Control Register – MCUCR

The MCU Control Register contains control bits for general MCU functions.

Bit	7	6	5	4	3	2	1	0	
$35 ($55)	–	PUD	SE	SM1	SM0	–	ISC01	ISC00	MCUCR
Read/Write	R	R/W	R/W	R/W	R/W	R	R/W	R/W	
Initial Value	0	0	0	0	0	0	0	0	

- **Bit 6 – PUD: Pull-up Disable**

When this bit is set (one), the pull-ups in the I/O ports are disabled even if the DDxn and PORTxn Registers are configured to enable the pull-ups ({DDxn, PORTxn} = 0b01). See "Configuring the Pin" on page 91 for more details about this feature.

Alternate Functions of Port A

Port A has an alternate functions as analog inputs for the ADC and Analog Comparator and pin change interrupt as shown in Table 41. If some Port A pins are configured as outputs, it is essential that these do not switch when a conversion is in progress. This might corrupt the result of the conversion. The ADC is described in "Analog to Digital Converter" on page 77. Analog Comparator is described in "Analog Comparator" on page 74. Pin change interrupt triggers on pins PA7, PA6 and PA3 if interrupt is enabled and it is not masked by the alternate functions even if the pin is configured as an output. See details from "Pin Change Interrupt" on page 38.

Table 41. Port A Pins Alternate Functions

Port Pin	Alternate Function
PA7	ADC6 (ADC input channel 6) AIN1 (Analog Comparator negative input) PCINT1 (Pin Change Interrupt 1)
PA6	ADC5 (ADC input channel 5) AIN0 (Analog Comparator positive input) PCINT1 (Pin Change Interrupt 1)
PA5	ADC4 (ADC input channel 4)
PA4	ADC3 (ADC input channel 3)
PA3	AREF (ADC external reference) PCINT1 (Pin Change Interrupt 1)
PA2	ADC2 (ADC input channel 2)
PA1	ADC1 (ADC input channel 1)
PA0	ADC0 (ADC input channel 0)

Table 42 and Table 43 relates the alternate functions of Port A to the overriding signals shown in Figure 57 on page 95. Thera are changes on PA7, PA6, and PA3 digital inputs. PA3 output and pullup driver are also overridden.

- **ADC6/AIN1 Port – A, Bit 7**

AIN1: Analog Comparator Negative input and ADC6: ADC input channel 6. Configure the port pin as input with the internal pull-up switched off to avoid the digital port function from interfering with the function of the analog comparator or analog to digital converter.

PCINT1: Pin Change Interrupt 1 pin. Pin change interrupt is enabled on pin when global interrupt is enabled, pin change interrupt is enabled and the alternate function do not mask the interrupt. The masking alternate function is the Analog Comparator. Digital input is enabled on pin PA7 also in SLEEP modes, if the pin change interrupt is enabled and not masked by the alternate function.

- **ADC5/AIN0 Port – A, Bit 6**

AIN0: Analog Comparator Positive input and ADC5: ADC input channel 5. Configure the port pin as input with the internal pull-up switched off to avoid the digital port function from interfering with the function of the Analog Comparator or analog to digital converter.

PCINT1: Pin Change Interrupt 1 pin. Pin change interrupt is enabled on pin when global interrupt is enabled, pin change interrupt is enabled and the alternate function do not mask the interrupt. The masking alternate function is the Analog Comparator. Digital input is enabled on pin PA6 also in SLEEP modes, if the pin change interrupt is enabled and not masked by the alternate function.

- **ADC4, ADC3 Port – A, Bit 5, 4**

ADC4/ADC3: ADC Input Channel 4 and 3. Configure the port pins as inputs with the internal pull-ups switched off to avoid the digital port function from interfering with the function of the analog to digital converter.

- **AREF/PCINT1 Port – A, Bit 3**

AREF: External Reference for ADC. Pullup and output driver are disabled on PA3 when the pin is used as an external reference or Internal Voltage Reference (2.56V) with external capacitor at the AREF pin by setting (one) the bit REFS0 in the ADC Multiplexer Selection Register (ADMUX).

PCINT1: Pin Change Interrupt 1 pin. Pin change interrupt is enabled on pin when global interrupt is enabled, pin change interrupt is enabled and the alternate function do not mask the interrupt. The masking alternate function is the pin usage as an analog reference for the ADC. Digital input is enabled on pin PA3 also in SLEEP modes, if the pin change interrupt is enabled and not masked by the alternate function.

Table 42. Overriding Signals for Alternate Functions in PA7..PA4

Signal Name	PA7/ADC6/ AIN1/PCINT1	PA6/ADC5/ AIN0/PCINT1	PA5/ADC4	PA4/ADC3
PUOE	0	0	0	0
PUOV	0	0	0	0
DDOE	0	0	0	0
DDOV	0	0	0	0
PVOE	0	0	0	0
PVOV	0	0	0	0
DIEOE	PCINT1_ENABLE(1) • ACSR[ACD]	PCINT1_ENABLE(1)• ACSR[ACD]	0	0
DIEOV	1	1	0	0
DI	PCINT1	PCINT1	–	–
AIO	ADC6 INPUT, AIN1	ADC5 INPUT, AIN0	ADC4 INPUT	ADC3 INPUT

Table 43. Overriding Signals for Alternate Functions in PA3..PA0

Signal Name	PA3/AREF/PCINT1	PA2/ADC2	PA1/ADC1	PA0/ADC0
PUOE	ADMUX[REFS0]	0	0	0
PUOV	0	0	0	0
DDOE	ADMUX[REFS0]	0	0	0
DDOV	0	0	0	0
PVOE	0	0	0	0
PVOV	0	0	0	0
DIEOE	PCINT1_ENABLE(1) • ~(2)ADMUX[REFS0]	0	0	0
DIEOV	1	0	0	0
DI	PCINT1	–	–	–
AIO	ANALOG REFERENCE INPUT	ADC2 INPUT	ADC1 INPUT	ADC0 INPUT

Notes: 1. Note that the PCINT1 Interrupt is only enabled if both the Global Interrupt Flag is enabled, the PCIE1 flag in GIMSK is set and the alternate function of the pin is disabled as described in “Pin Change Interrupt” on page 38
2. Not operator is marked with “~”.

Alternate Functions Of Port B

Port B has an alternate functions for the ADC, Clocking, Timer/Counters, USI, SPI programming and pin change interrupt. The ADC is described in “Analog to Digital Converter” on page 77, Clocking in “Architectural Overview” on page 6, timers in “Timer/Counters” on page 44 and USI in “Universal Serial Interface – USI” on page 63. Pin change interrupt triggers on pins PB7 - PB0 if interrupt is enabled and it is not masked by the alternate functions even if the pin is configured as an output. See details from “Pin Change Interrupt” on page 38. Pin functions in programming modes are described in “Memory Programming” on page 106. The alternate functions are shown in Table 44.

Table 44. Port B Pins Alternate Functions

Port Pin	Alternate Functions
PB7	ADC10 (ADC Input Channel 10) $\overline{\text{RESET}}$ (External Reset Input) PCINT1 (Pin Change Interrupt 1)
PB6	ADC9 (ADC Input Channel 9) INT0 (External Interrupt 0 Input) T0 (Timer/Counter 0 External Counter Clock Input) PCINT1 (Pin Change Interrupt 1)
PB5	ADC8 (ADC Input Channel 8) XTAL2 (Crystal Oscillator Output) PCINT1 (Pin Change Interrupt 1)
PB4	ADC7 (ADC Input Channel 7) XTAL1 (Crystal Oscillator Input) PCINT1 (Pin Change Interrupt 1)
PB3	OC1B (Timer/Counter1 PWM Output B, Timer/Counter1Output Compare B Match Output) PCINT0 (Pin Change Interrupt 0)
PB2	SCK (USI Clock Input/Output) SCL (USI External Open-collector Serial Clock) $\overline{\text{OC1B}}$ (Inverted Timer/Counter1 PWM Output B) PCINT0 (Pin Change Interrupt 0)
PB1	DO (USI Data Output) OC1A (Timer/Counter1 PWM Output A, Timer/Counter1 Output Compare A Match Output) PCINT0 (Pin Change Interrupt 0)
PB0	DI (USI Data Input) SDA (USI Serial Data) $\overline{\text{OC1A}}$ (Inverted Timer/Counter1 PWM Output A) PCINT0 (Pin Change Interrupt 0)

The alternate pin configuration is as follows:

- **ADC10/$\overline{\text{RESET}}$/PCINT1 – Port B, Bit 7**

ADC10: ADC Input Channel 10. Configure the port pins as inputs with the internal pull-ups switched off to avoid the digital port function from interfering with the function of the analog to digital converter.

$\overline{\text{RESET}}$: External Reset input is active low and enabled by unprogramming (“1”) the RSTDISBL Fuse. Pullup is activated and output driver and digital input are deactivated when the pin is used as the $\overline{\text{RESET}}$ pin.

PCINT1: Pin Change Interrupt 1 pin. Pin change interrupt is enabled on pin when global interrupt is enabled, pin change interrupt is enabled and the alternate function do not mask the interrupt. The masking alternate function is the pin usage as RESET. Digital input is enabled on pin PB7 also in SLEEP modes, if the pin change interrupt is enabled and not masked by the alternate function.

- **ADC9/INT0/T0/PCINT1 – Port B, Bit 6**

ADC9: ADC Input Channel 9. Configure the port pins as inputs with the internal pull-ups switched off to avoid the digital port function from interfering with the function of the analog to digital converter.

INT0: External Interrupt source 0: The PB6 pin can serve as an external interrupt source enabled by setting (one) the bit INT0 in the General Input Mask Register (GIMSK).

T0: Timer/Counter0 External Counter Clock input is enabled by setting (one) the bits CS02 and CS01 in the Timer/Counter0 Control Register (TCCR0).

PCINT1: Pin Change Interrupt 1 pin. Pin change interrupt is enabled on pin when global interrupt is enabled, pin change interrupt is enabled and the alternate functions do not mask the interrupt. The masking alternate functions are the external low level Interrupt source 0 (INT0) and the Timer/Counter0 External Counter clock input (T0). Digital input is enabled on pin PB6 also in SLEEP modes, if the pin change interrupt is enabled and not masked by the alternate functions.

- **ADC8/XTAL2/PCINT1 – Port B, Bit 5**

ADC8: ADC Input Channel 8. Configure the port pins as inputs with the internal pull-ups switched off to avoid the digital port function from interfering with the function of the analog to digital converter.

XTAL2: Chip Clock Oscillator pin 2. Used as clock pin for all chip clock sources except internal calibrateble RC Oscillator, external clock and PLL clock. When used as a clock pin, the pin can not be used as an I/O pin. When using internal calibratable RC Oscillator, External clock or PLL clock as Chip clock sources, PB5 serves as an ordinary I/O pin.

PCINT1: Pin Change Interrupt 1 pin. Pin change interrupt is enabled on pin when global interrupt is enabled, pin change interrupt is enabled and the alternate functions do not mask the interrupt. The masking alternate functions are the XTAL2 outputs. Digital input is enabled on pin PB5 also in SLEEP modes, if the pin change interrupt is enabled and not masked by the alternate functions.

- **ADC7/XTAL1/PCINT1 – Port B, Bit 4**

ADC7: ADC Input Channel 7. Configure the port pins as inputs with the internal pull-ups switched off to avoid the digital port function from interfering with the function of the analog to digital converter.

XTAL1: Chip Clock Oscillator pin 1. Used for all chip clock sources except internal calibrateble RC oscillator and PLL clock. When used as a clock pin, the pin can not be used as an I/O pin. When using internal calibratable RC Oscillator or PLL clock as chip clock sources, PB4 serves as an ordinary I/O pin.

PCINT1: Pin Change Interrupt 1 pin. Pin change interrupt is enabled on pin when global interrupt is enabled, pin change interrupt is enabled and the alternate functions do not mask the interrupt. The masking alternate functions are the XTAL1 inputs. Digital input is enabled on pin PB4 also in SLEEP modes, if the pin change interrupt is enabled and not masked by the alternate functions.

- **OC1B/PCINT0 – Port B, Bit 3**

OC1B: Output Compare match output: The PB3 pin can serve as an output for the Timer/Counter1 compare match B. The PB3 pin has to be configured as an output (DDB3 set (one)) to serve this function. The OC1B pin is also the output pin for the PWM mode.

PCINT0: Pin Change Interrupt 0 pin. Pin change interrupt is enabled on pin when global interrupt is enabled, pin change interrupt is enabled and the alternate functions do not mask the interrupt. The masking alternate function is the output compare match output OC1B. Digital input is enabled on pin PB3 also in SLEEP modes, if the pin change interrupt is enabled and not masked by the alternate functions.

- **SCK/SCL/$\overline{\text{OC1B}}$/PCINT0 – Port B, Bit 2**

SCK: Clock input or output in USI Three-wire mode. When the SPI is enabled this pin is configured as an input. In the USI Three-wire mode the bit DDRB2 controls the direction of the pin, output for the Master mode and input for the Slave mode.

SCL: USI External Open-collector Serial Clock for USI Two-wire mode. The SCL pin is pulled low when PORTB2 is cleared (zero) or USI start condition is detected and DDRB2 is set (one). Pull-up is disabled in USI Two-wire mode.

$\overline{\text{OC1B}}$: Inverted Timer/Counter1 PWM Output B: The PB2 pin can serve as an inverted output for the Timer/Counter1 PWM mode if USI is not enabled. The PB2 pin has to be configured as an output (DDB2 set (one)) to serve this function.

PCINT1: Pin Change Interrupt 0 pin. Pin change interrupt is enabled on pin when global interrupt is enabled, pin change interrupt is enabled and the alternate functions do not mask the interrupt. The masking alternate function are the inverted output compare match output $\overline{\text{OC1B}}$ and USI clocks SCK/SCL. Digital input is enabled on pin PB2 also in SLEEP modes, if the pin change interrupt is enabled and not masked by the alternate functions.

- **DO/OC1A/PCINT0 – Port B, Bit 1**

DO: Data Output in USI Three-wire mode. Data output (DO) overrides PORTB1 value and it is driven to the port when the data direction bit DDB1 is set (one). However the PORTB1 bit still controls the pullup, enabling pullup if direction is input and PORTB1 is set(one).

OC1A: Output Compare match output: The PB1 pin can serve as an output for the Timer/Counter1 compare match A. The PB1 pin has to be configured as an output (DDB1 set (one)) to serve this function. The OC1B pin is also the output pin for the PWM mode timer function if not used in programming or USI.

PCINT0: Pin Change Interrupt 0 pin. Pin change interrupt is enabled on pin when global interrupt is enabled, pin change interrupt is enabled and the alternate functions do not mask the interrupt. The masking alternate functions are the output compare match output OC1A and Data Output (DO) in USI Three-wire mode. Digital input is enabled on pin PB1 also in SLEEP modes, if the pin change interrupt is enabled and not masked by the alternate functions.

- **DI/SDA/$\overline{\text{OC1A}}$/PCINT0 – Port B, Bit 0**

DI: Data Input in USI Three-wire mode. USI Three-wire mode does not override normal port functions., so pin must be configure as an input.

SDA: Serial Data in USI Two-wire mode. Serial data pin is bi-directional and uses open-collector output. The SDA pin is enabled by setting the pin as an output. The pin is pulled low when the PORTB0 or USI shiftRegister is zero when DDB0 is set (one). Pull-up is disabled in USI Two-wire mode.

$\overline{\text{OC1A}}$: Inverted Timer/Counter1 PWM output A: The PB0 pin can serve as an Inverted output for the PWM mode if not used in programming or USI. The PB0 pin has to be configured as an output (DDB0 set (one)) to serve this function.

PCINT0: Pin Change Interrupt 0 pin. Pin change interrupt is enabled on pin when global interrupt is enabled, pin change interrupt is enabled and the alternate functions do not mask the interrupt. The masking alternate functions are the inverted output compare match output $\overline{\text{OC1A}}$ and USI data DI or SDA. Digital input is enabled on pin PB0 also in SLEEP modes, if the pin change interrupt is enabled and not masked by the alternate functions. Table 45 and Table 46 relate the alternate functions of Port B to the overriding signals shown in “Alternate Port Functions” on page 95.

Table 45. Overriding Signals for Alternate Functions in PB7..PB4

Signal Name	PB7/ADC10/$\overline{\text{RESET}}$/ PCINT1	PB6/ADC9/INT0/TO/ PCINT1	PB5/ADC8/XTAL2/ PCINT1	PB4/ADC7/XTAL1
PUOE	RSTDSBL(1)	0	~(5)PB5IOENABLE(3)	~PB4IOENABLE(3)
PUOV	1	0	0	0
DDOE	RSTDSBL(1)	0	~PB5IOENABLE(3)	~PB4IOENABLE(3)
DDOV	0	0	0	0
PVOE	0	0	0	0
PVOV	0	0	0	0
DIEOE	PCINT1_ENABLE(2) | RSTDSBL(1)	~T0_EXT_CLOCK (6) • PCINT1_ENABLE(2) | INT0_ENABLE(4)	PCINT1_ENABLE(2) | ~PB5IOENABLE(3)	PCINT_ ENABLE (2) | ~PB4IOENABLE(3) | EXT_CLOCK_ENABLE(7)
DIEOV	PCINT1_ENABLE(2) • ~(5)RSTDSBL(1)	1	PCINT1_ENABLE(2) • PB5IOENABLE(3)	PCINT1_ENABLE(2)• PB4IOENABLE(3) | EXT_CLOCK_ENABLE
DI	PCINT1	INT0, T0, PCINT1	PCINT1	External Clock, PCINT1
AIO	ADC10, RESET INPUT	ADC9	ADC8, XTAL2	XTAL1

Notes:
1. RSTDISBL Fuse (active low) is described in section “Reset Sources” on page 21.
2. Note that the PCINT1 Interrupt is only enabled if both the Global Interrupt Flag is enabled, the PCIE1 flag in GIMSK is set and the alternate function of the pin is disabled as described in “Pin Change Interrupt” on page 38.
3. PB5IOENABLE and PB4IOENABLE are given by the PLLCK and CKSEL Fuses as described in “Clock Sources” on page 27.
4. External low level interrupt is enabled if both the Global Interrupt Flag is enabled and the INT0 flag in GIMSK is set as described in “External Interrupt” on page 38.
5. Not operator is marked with “~”.
6. The operation of the Timer/Counter0 with external clock disabled is described in “8-bit Timer/Counter0” on page 45.
7. External clock is selected by the PLLCK and CKSEL Fuses as described in “Clock Sources” on page 27.

Table 46. Overriding Signals for Alternate Functions in PB3..PB0

Signal Name	PB3/OC1B/PCINT0	PB2/SCK/SCL/$\overline{\text{OC1B}}$/PCINT0	PB1/DO/OC1A/PCINT0	PB0/DI/SDA/$\overline{\text{OC1A}}$
PUOE	0	USI_TWO-WIRE(3)	0	USI_TWO-WIRE(3)
PUOV	0	0	0	0
DDOE	0	USI_TWO-WIRE(3)	0	USI_TWO-WIRE(3)
DDOV	0	(USI_SCL_HOLD(4) | ~(8)PORTB2) • DDB2	0	(~SDA | ~PORTB0) • DDB0
PVOE	OC1B_ENABLE(1)	USI_TWO-WIRE(3) • DDB2 | OC1B_ENABLE(1)	USI_THREE-WIRE(3) | OC1A_ENABLE(1)	USI_TWO-WIRE(3)• DDB0 | $\overline{\text{OC1A}}$_ENABLE(1)
PVOV	OC1B	~(USI_TWO-WIRE • DDB2) • $\overline{\text{OC1B}}$	USI_THREE-WIRE(3) • DO(6) | ~USI_THREE-WIRE • OC1A_ENABLE(1) • OC1A	~(USI_TWO-WIRE• DDB0) • $\overline{\text{OC1A}}$_ENABLE(1) • $\overline{\text{OC1A}}$
DIEOE	PCINT0_ENABLE(2) • ~OC1B_ENABLE(1)	~(USI_TWO-WIRE | USI_THREE-WIRE | $\overline{\text{OC1B}}$_ENABLE) • PCINT0_ENABLE(2) | USI_START_I.ENABLE(5)	~(USI_THREE-WIRE | OC1A_ENABLE) • PCINT0_ENABLE(2)	~(USI_TWO-WIRE(3) | USI_THREE-WIRE(3) | $\overline{\text{OC1A}}$_ENABLE(1)) • PCINT0_ENABLE(2) | USI_START_I.ENABLE(5)
DIEOV	1	1	1	1
DI	PCINT0	PCINT0, SCL, SCK	PCINT0	PCINT0, SDA
AIO	–	–	–	–

Notes:
1. Enabling of the Timer/Counter1 Compare match outputs and Timer/Counter1 PWM Outputs OC1A/OC1B and $\overline{\text{OC1A}}$/$\overline{\text{OC1B}}$ are described in the section “8-bit Timer/Counter1” on page 47.
2. Note that the PCINT0 Interrupt is only enabled if both the Global Interrupt Flag is enabled, the PCIE0 flag in GIMSK is set and the alternate function of the pin is disabled as described in “Pin Change Interrupt” on page 38.
3. The Two-wire and Three-wire USI-modes are described in “Universal Serial Interface – USI” on page 63.
4. Shift clock (SCL) hold for USI is in described “Universal Serial Interface – USI” on page 63.
5. USI start up interrupt is enabled if both the Global Interrupt Flag is enabled and the USISIE flag in the USICR Register is set as described in “Universal Serial Interface – USI” on page 63.
6. Data Output (DO) is valid in USI Three-wire mode and the operation is described in “Universal Serial Interface – USI” on page 63.
7. Operation of the data pin SDA in USI Two-wire mode and DI in USI Three-wire mode in “Universal Serial Interface – USI” on page 63.
8. Not operator is marked with “~”.

Register Description for I/O Ports

Port A Data Register – PORTA

Bit	7	6	5	4	3	2	1	0	
$1B ($3B)	**PORTA7**	**PORTA6**	**PORTA5**	**PORTA4**	**PORTA3**	**PORTA2**	**PORTA1**	**PORTA0**	**PORTA**
Read/Write	R/W	R/W	R/W	R/W	R/W	R/W	R/W	R/W	
Initial Value	0	0	0	0	0	0	0	0	

Port A Data Direction Register – DDRA

Bit	7	6	5	4	3	2	1	0	
$1A ($3A)	**DDA7**	**DDA6**	**DDA5**	**DDA4**	**DDA3**	**DDA2**	**DDA1**	**DDA0**	**DDRA**
Read/Write	R/W	R/W	R/W	R/W	R/W	R/W	R/W	R/W	
Initial Value	0	0	0	0	0	0	0	0	

Port A Input Pins Address – PINA

Bit	7	6	5	4	3	2	1	0	
$19 ($39)	**PINA7**	**PINA6**	**PINA5**	**PINA4**	**PINA3**	**PINA2**	**PINA1**	**PINA0**	**PINA**
Read/Write	R	R	R	R	R	R	R	R	
Initial Value	N/A	N/A	N/A	N/A	N/A	N/A	N/A	N/A	

Port B Data Register – PORTB

Bit	7	6	5	4	3	2	1	0	
$18 ($38)	**PORTB7**	**PORTB6**	**PORTB5**	**PORTB4**	**PORTB3**	**PORTB2**	**PORTB1**	**PORTB0**	**PORTB**
Read/Write	R/W	R/W	R/W	R/W	R/W	R/W	R/W	R/W	
Initial Value	0	0	0	0	0	0	0	0	

Port B Data Direction Register – DDRB

Bit	7	6	5	4	3	2	1	0	
$17 ($37)	**DDB7**	**DDB6**	**DDB5**	**DDB4**	**DDB3**	**DDB2**	**DDB1**	**DDB0**	**DDRB**
Read/Write	R/W	R/W	R/W	R/W	R/W	R/W	R/W	R/W	
Initial Value	0	0	0	0	0	0	0	0	

Port B Input Pins Address – PINB

Bit	7	6	5	4	3	2	1	0	
$16 ($36)	**PINB7**	**PINB6**	**PINB5**	**PINB4**	**PINB3**	**PINB2**	**PINB1**	**PINB0**	**PINB**
Read/Write	R	R	R	R	R	R	R	R	
Initial Value	N/A	N/A	N/A	N/A	N/A	N/A	N/A	N/A	

Program and Data Memory Lock Bits

The ATtiny26 provides two Lock bits which can be left unprogrammed ("1") or can be programmed ("0") to obtain the additional features listed in Table 48. The Lock bits can only be erased to "1" with the Chip Erase command.

Table 47. Lock Bit Byte[1]

Lock Bit Byte	Bit No	Description	Default Value
	7	–	1 (unprogrammed)
	6	–	1 (unprogrammed)
	5	–	1 (unprogrammed)
	4	–	1 (unprogrammed)
	3	–	1 (unprogrammed)
	2	–	1 (unprogrammed)
LB2	1	Lock bit	1 (unprogrammed)
LB1	0	Lock bit	1 (unprogrammed)

Note: 1. "1" means unprogrammed, "0" means programmed

Table 48. Lock Bit Protection Modes

Memory Lock Bits			
LB Mode	LB2[2]	LB1[2]	Protection Type
1	1	1	No memory lock features enabled.
2	1	0	Further programming of the Flash and EEPROM is disabled in parallel and serial programming mode. The Fuse bits are locked in both serial and parallel programming mode.[1]
3	0	0	Further programming and verification of the Flash and EEPROM is disabled in parallel and serial programming mode. The Fuse bits are locked in both serial and parallel programming mode.[1]

Notes: 1. Program the Fuse bits before programming the Lock bits.
2. "1" means unprogrammed, "0" means programmed

Fuse Bits

The ATtiny26 has two Fuse bytes. Table 49 and Table 50 describe briefly the functionality of all the fuses and how they are mapped into the fuse bytes. Note that the fuses are read as logical zero, “0”, if they are programmed.

Table 49. Fuse High Byte

Fuse High Byte	Bit No	Description	Default Value
	7	–	1 (unprogrammed)
	6	–	1 (unprogrammed)
	5	–	1 (unprogrammed)
RSTDISBL(2)	4	Select if PB7 is I/O pin or RESET pin	1 (unprogrammed, PB7 is RESET pin)
SPIEN(1)	3	Enable Serial Program and Data Downloading	0 (programmed, SPI prog. enabled)
EESAVE	2	EEPROM memory is preserved through the Chip Erase	1 (unprogrammed, EEPROM not preserved)
BODLEVEL	1	Brown out detector trigger level	1 (unprogrammed)
BODEN	0	Brown out detector enable	1 (unprogrammed, BOD disabled)

Notes: 1. The SPIEN Fuse is not accessible in serial programming mode.
2. When programming the RSTDISBL Fuse, Parallel Programming has to be used to change fuses or perform further programming.

Table 50. Fuse Low Byte

Fuse Low Byte	Bit No	Description	Default Value
PLLCK	7	Use PLL for internal clock	1 (unprogrammed)
CKOPT(3)	6	Oscillator options	1 (unprogrammed)
SUT1	5	Select start-up time	1 (unprogrammed)(1)
SUT0	4	Select start-up time	0 (programmed)(1)
CKSEL3	3	Select Clock source	0 (programmed)(2)
CKSEL2	2	Select Clock source	0 (programmed)(2)
CKSEL1	1	Select Clock source	0 (programmed)(2)
CKSEL0	0	Select Clock source	1 (unprogrammed)(2)

Notes: 1. The default value of SUT1..0 results in maximum start-up time. See Table 13 on page 31 for details.
2. The default setting of CKSEL3..0 results in internal RC Oscillator at 1 MHz. See Table 4 on page 27 for details.
3. The CKOPT Fuse functionality depends on the setting of the CKSEL bits. See “System Clock and Clock Options” on page 25 for details.

The status of the Fuse bits is not affected by Chip Erase. Note that the Fuse bits are locked if Lock bit1 (LB1) is programmed. Program the Fuse bits before programming the Lock bits.

Latching of Fuses

The fuse values are latched when the device enters programming mode and changes of the fuse values will have no effect until the part leaves programming mode. This does not apply to the EESAVE Fuse which will take effect once it is programmed. The fuses are also latched on Power-up in normal mode.

Signature Bytes

All Atmel microcontrollers have a three-byte signature code which identifies the device. This code can be read in both serial and parallel mode, also when the device is locked. The three bytes reside in a separate address space.

For the ATtiny26 the signature bytes are:

1. $000: $1E (indicates manufactured by Atmel).
2. $001: $91 (indicates 2KB Flash memory).
3. $002: $09 (indicates ATtiny26 device when $001 is $91).

Calibration Byte

The ATtiny26 stores four different calibration values for the internal RC Oscillator. These bytes resides in the signature row high byte of the addresses 0x0000, 0x0001, 0x0002, and 0x0003 for 1, 2, 4, and 8 MHz respectively. During Reset, the 1 MHz value is automatically loaded into the OSCCAL Register. If other frequencies are used, the calibration value has to be loaded manually, see “Oscillator Calibration Register – OSCCAL” on page 31 for details.

Parallel Programming Parameters, Pin Mapping, and Commands

This section describes how to parallel program and verify Flash Program memory, EEPROM Data memory, Memory Lock bits, and Fuse bits in the ATtiny26. Pulses are assumed to be at least 250 ns unless otherwise noted.

Signal Names

In this section, some pins of the ATtiny26 are referenced by signal names describing their functionality during parallel programming, see Figure 58 and Table 51. Pins not described in the following table are referenced by pin names.

The XA1/XA0 pins determine the action executed when the XTAL1 pin is given a positive pulse. The bit coding is shown in Table 53.

When pulsing $\overline{WR}$ or $\overline{OE}$, the command loaded determines the action executed. The different Commands are shown in Table 54.

Figure 58. Parallel Programming

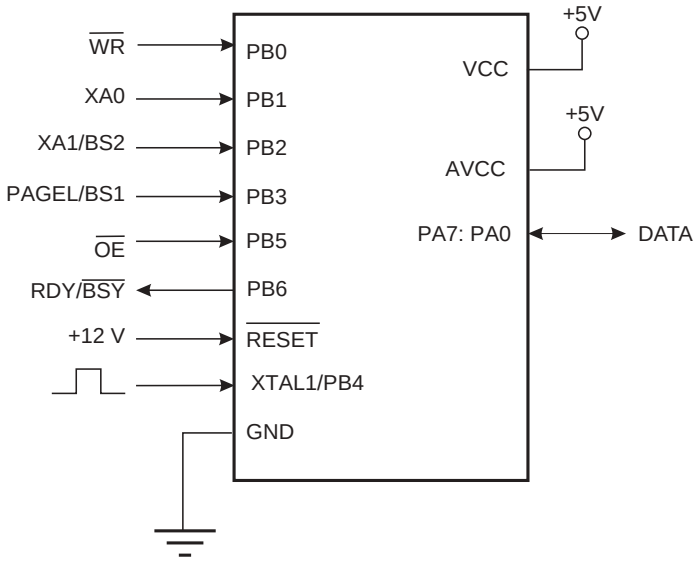

Table 51. Pin Name Mapping

Signal Name in Programming Mode	Pin Name	I/O	Function
$\overline{WR}$	PB0	I	Write Pulse (Active low)
XA0	PB1	I	XTAL Action Bit 0
XA1/BS2(1)	PB2	I	XTAL Action Bit 1 multiplexed with Byte Select 2 (“0” selects low byte, “1” selects 2’nd high byte)
PAGEL/BS1(1)	PB3	I	Program Memory and EEPROM data Page Load multiplexed with Byte Select 1 (“0” selects low byte, “1” selects high byte).
$\overline{OE}$	PB5	I	Output Enable (Active low)
RDY/$\overline{BSY}$	PB6	O	0: Device is busy programming, 1: Device is ready for new command
DATA	PA7:0	I/O	Bidirectional Data bus (Output when $\overline{OE}$ is low)

Note: 1. The pin is used for two different control signals. In the description below, normally only one of the signals is referred. E.g., “give BS1 a positive pulse” equals “give PAGEL/BS1 a positive pulse”.

Table 52. Pin Values used to Enter Programming Mode

Pin	Symbol	Value
PAGEL/BS1	Prog_enable[3]	0
XA1/BS2	Prog_enable[2]	0
XA0	Prog_enable[1]	0
$\overline{WR}$	Prog_enable[0]	0

Table 53. XA1 and XA0 Coding[1]

XA1	XA0	Action when XTAL1 is Pulsed
0	0	Load Flash or EEPROM Address (High or low address byte determined by BS1).
0	1	Load Data (High or Low data byte for Flash determined by BS1).
1	0	Load Command
1	1	No Action, Idle

Note: 1. [XA1, XA0] = 0b11 is “No Action, Idle”. As long as XTAL1 is not pulsed, the Command, Address, and Data Registers remain unchanged. Therefore, there are no problems using BS2 as described below even though BS2 is multiplexed with XA1. BS2 is only asserted when reading the fuses ($\overline{OE}$ is low) and XTAL1 is not pulsed.

Table 54. Command Byte Bit Coding

Command Byte	Command Executed
1000 0000	Chip Erase
0100 0000	Write Fuse Bits
0010 0000	Write Lock Bits
0001 0000	Write Flash
0001 0001	Write EEPROM
0000 1000	Read Signature Bytes and Calibration Byte
0000 0100	Read Fuse and Lock Bits
0000 0010	Read Flash
0000 0011	Read EEPROM

Table 55. No. of Words in a Page and no. of Pages in the Flash

Flash Size	Page Size	PCWORD	No. of Pages	PCPAGE	PCMSB
1K words (2K bytes)	16 words	PC[3:0]	64	PC[9:4]	9

Table 56. No. of Words in a Page and no. of Pages in the EEPROM

EEPROM Size	Page Size	PCWORD	No. of Pages	PCPAGE	EEAMSB
128 bytes	4 bytes	EEA[1:0]	32	EEA[7:0]	7

Parallel Programming

Enter Programming Mode

The following algorithm puts the device in parallel programming mode:

1. Apply 4.5 - 5.5 V between V_{CC} and GND, and wait for at least 100 µs.
2. Set $\overline{\text{RESET}}$ to “0” and toggle XTAL1 at least 6 times.
3. Set the Prog_enable pins listed in Table 52 on page 109 to “0000” and wait at least 100 ns.
4. Apply 11.5 - 12.5V to $\overline{\text{RESET}}$. Any activity on Prog_enable pins within 100 ns after +12V has been applied to $\overline{\text{RESET}}$, will cause the device to fail entering programming mode.

Note, if the $\overline{\text{RESET}}$ pin is disabled by programming the RSTDISBL Fuse, it may not be possible to follow the proposed algorithm above. The same may apply when External Crystal or External RC configuration is selected because it is not possible to apply qualified XTAL1 pulses. In such cases, the following algorithm should be followed:

1. Set Prog_enable pins listed in Table 52 on page 109 to “0000”.
2. Apply 4.5 - 5.5V between V_{CC} and GND simultanously as 11.5 - 12.5V is applied to $\overline{\text{RESET}}$.
3. Wait 100 ns.
4. Re-program the fuses to ensure that External Clock is selected as clock source (CKSEL3:0 = 0b0000) and $\overline{\text{RESET}}$ pin is activated (RSTDISBL unprogrammed). If Lock bits are programmed, a Chip Erase command must be executed before changing the fuses.
5. Exit Programming mode by power the device down or by bringing $\overline{\text{RESET}}$ pin to 0b0.
6. Entering Programming mode with the original algorithm, as described above.

Considerations for Efficient Programming

The loaded command and address are retained in the device during programming. For efficient programming, the following should be considered.

- The command needs only be loaded once when writing or reading multiple memory locations.
- Skip writing the data value $FF, that is the contents of the entire EEPROM (unless the EESAVE Fuse is programmed) and Flash after a Chip Erase.
- Address high byte needs only be loaded before programming or reading a new 256-word window in Flash or 256-byte EEPROM. This consideration also applies to Signature bytes reading.

Chip Erase

The Chip Erase will erase the Flash and EEPROM[1] memories plus Lock bits. The Lock bits are not reset until the program memory has been completely erased. The Fuse bits are not changed. A Chip Erase must be performed before the Flash and/or EEPROM are reprogrammed.

Note: 1. The EEPROM memory is preserved during Chip Erase if the EESAVE Fuse is programmed.

Load Command “Chip Erase”

1. Set XA1, XA0 to “10”. This enables command loading.
2. Set BS1 to “0”.
3. Set DATA to “1000 0000”. This is the command for Chip Erase.
4. Give XTAL1 a positive pulse. This loads the command.
5. Give $\overline{WR}$ a negative pulse. This starts the Chip Erase. RDY/$\overline{BSY}$ goes low.
6. Wait until RDY/$\overline{BSY}$ goes high before loading a new command.

Programming the Flash

The Flash is organized in pages, see Table 55 on page 110. When programming the Flash, the program data is latched into a page buffer. This allows one page of program data to be programmed simultaneously. The following procedure describes how to program the entire Flash memory:

A. Load Command "Write Flash"

1. Set XA1, XA0 to “10”. This enables command loading.
2. Set BS1 to “0”.
3. Set DATA to “0001 0000”. This is the command for Write Flash.
4. Give XTAL1 a positive pulse. This loads the command.

B. Load Address Low byte

1. Set XA1, XA0 to “00”. This enables address loading.
2. Set BS1 to “0”. This selects low address.
3. Set DATA = Address low byte ($00 - $FF).
4. Give XTAL1 a positive pulse. This loads the address low byte.

C. Load Data Low Byte

1. Set XA1, XA0 to “01”. This enables data loading.
2. Set DATA = Data low byte ($00 - $FF).
3. Give XTAL1 a positive pulse. This loads the data byte.

D. Load Data High Byte

1. Set BS1 to “1”. This selects high data byte.
2. Set XA1, XA0 to “01”. This enables data loading.
3. Set DATA = Data high byte ($00 - $FF).
4. Give XTAL1 a positive pulse. This loads the data byte.

E. Repeat B through D until the entire buffer is filled or until all data within the page is loaded.

While the lower bits in the address are mapped to words within the page, the higher bits address the pages within the FLASH. This is illustrated in Figure 59 on page 113. Note that if less than 8 bits are required to address words in the page (pagesize < 256), the most significant bit(s) in the address low byte are used to address the page when performing a page write.

F. Load Address High byte

1. Set XA1, XA0 to “00”. This enables address loading.
2. Set BS1 to “1”. This selects high address.
3. Set DATA = Address high byte ($00 - $03).
4. Give XTAL1 a positive pulse. This loads the address high byte.

G. Program Page

1. Set BS1 to “0”.
2. Give $\overline{WR}$ a negative pulse. This starts programming of the entire page of data. RDY/$\overline{BSY}$goes low.
3. Wait until RDY/$\overline{BSY}$ goes high. (See Figure 60 for signal waveforms.)

H. Repeat B through G until the entire Flash is programmed or until all data has been programmed.

I. End Page Programming

1. Set XA1, XA0 to “10”. This enables command loading.
2. Set DATA to “0000 0000”. This is the command for No Operation.
3. Give XTAL1 a positive pulse. This loads the command, and the internal write signals are reset.

Figure 59. Addressing the Flash which is Organized in Pages(1)

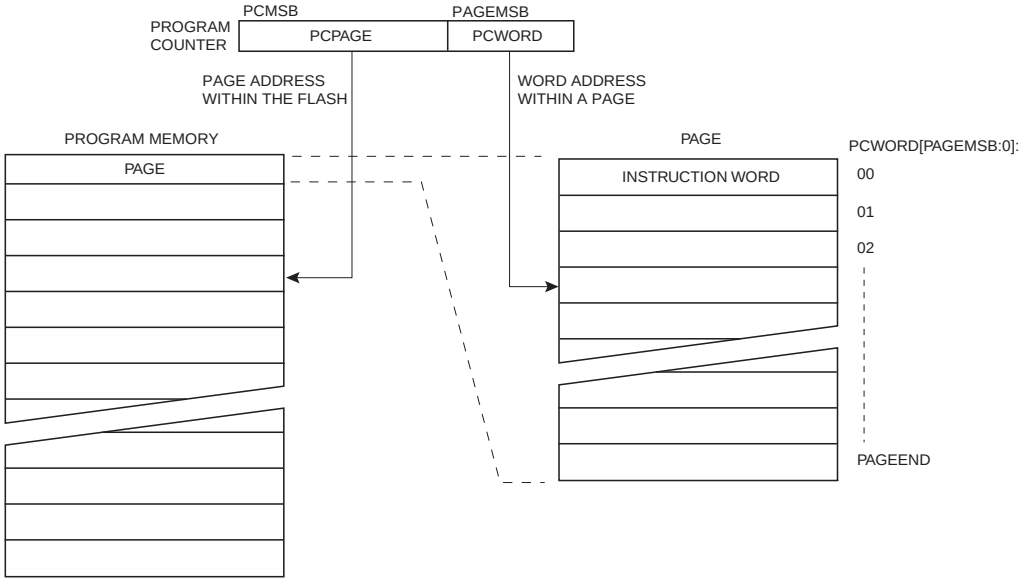

Note: 1. PCPAGE and PCWORD are listed in Table 55 on page 110.

Figure 60. Programming the Flash Waveforms[1]

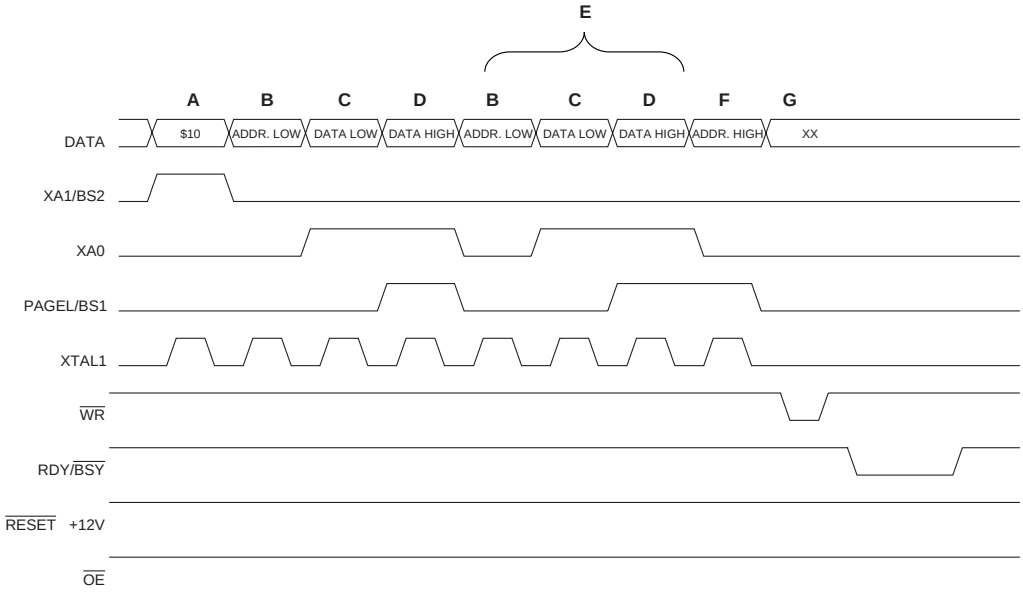

Note: 1. "XX" is don't care. The letters refer to the programming description above.

Programming the EEPROM

The EEPROM is organized in pages, see Table 56 on page 110. When programming the EEPROM, the program data is latched into a page buffer. This allows one page of data to be programmed simultaneously. The programming algorithm for the EEPROM data memory is as follows (refer to "Programming the Flash" on page 112 for details on Command, Address and Data loading):

1. A: Load Command "0001 0001".
2. B: Load Address Low Byte ($00 - $FF).
3. C: Load Data ($00 - $FF).

J: Repeat 2 and 3 until the entire buffer is filled

K: Program EEPROM page

1. Set BS1 to "0".
2. Give $\overline{WR}$ a negative pulse. This starts programming of the EEPROM page. RDY/$\overline{BSY}$ goes low.
3. Wait until to RDY/$\overline{BSY}$ goes high before programming the next page. (See Figure 61 for signal waveforms.)

Figure 61. Programming the EEPROM Waveforms

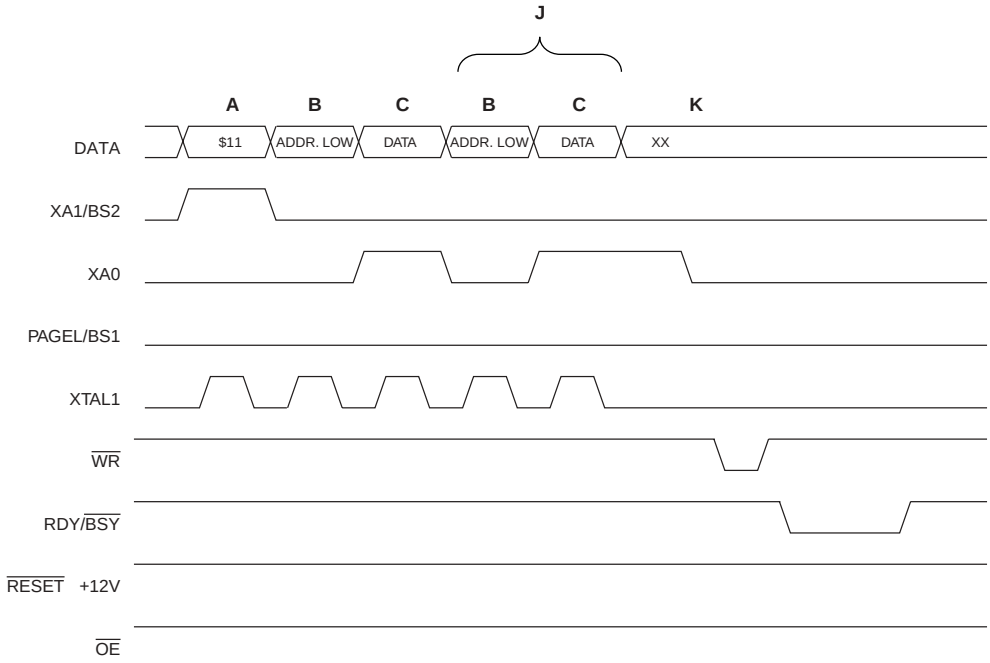

Reading the Flash

The algorithm for reading the Flash memory is as follows (refer to “Programming the Flash” on page 112 for details on Command and Address loading):

1. A: Load Command “0000 0010”.
2. F: Load Address High Byte ($00 - $03).
3. B: Load Address Low Byte ($00 - $FF).
4. Set $\overline{OE}$ to “0”, and BS1 to “0”. The Flash word low byte can now be read at DATA.
5. Set BS1 to “1”. The Flash word high byte can now be read at DATA.
6. Set $\overline{OE}$ to “1”.

Reading the EEPROM

The algorithm for reading the EEPROM memory is as follows (refer to “Programming the Flash” on page 112 for details on Command and Address loading):

1. A: Load Command “0000 0011”.
2. B: Load Address Low Byte ($00 - $FF).
3. Set $\overline{OE}$ to “0”, and BS1 to “0”. The EEPROM Data byte can now be read at DATA.
4. Set $\overline{OE}$ to “1”.

Programming the Fuse Low Bits

The algorithm for programming the Fuse Low bits is as follows (refer to “Programming the Flash” on page 112 for details on Command and Data loading):

1. A: Load Command “0100 0000”.
2. C: Load Data Low Byte. Bit n = “0” programs and bit n = “1” erases the Fuse bit.
3. Set BS1 and BS2 to “0”.
4. Give $\overline{WR}$ a negative pulse and wait for RDY/$\overline{BSY}$ to go high.

Programming the Fuse High Bits

The algorithm for programming the Fuse high bits is as follows (refer to “Programming the Flash” on page 112 for details on Command and Data loading):

1. A: Load Command “0100 0000”.
2. C: Load Data Low Byte. Bit n = “0” programs and bit n = “1” erases the Fuse bit.
3. Set BS1 to “1” and BS2 to “0”. This selects high data byte.
4. Give $\overline{WR}$ a negative pulse and wait for RDY/$\overline{BSY}$ to go high.
5. Set BS1 to “0”. This selects low data byte.

Figure 62. Programming the Fuse Waveforms

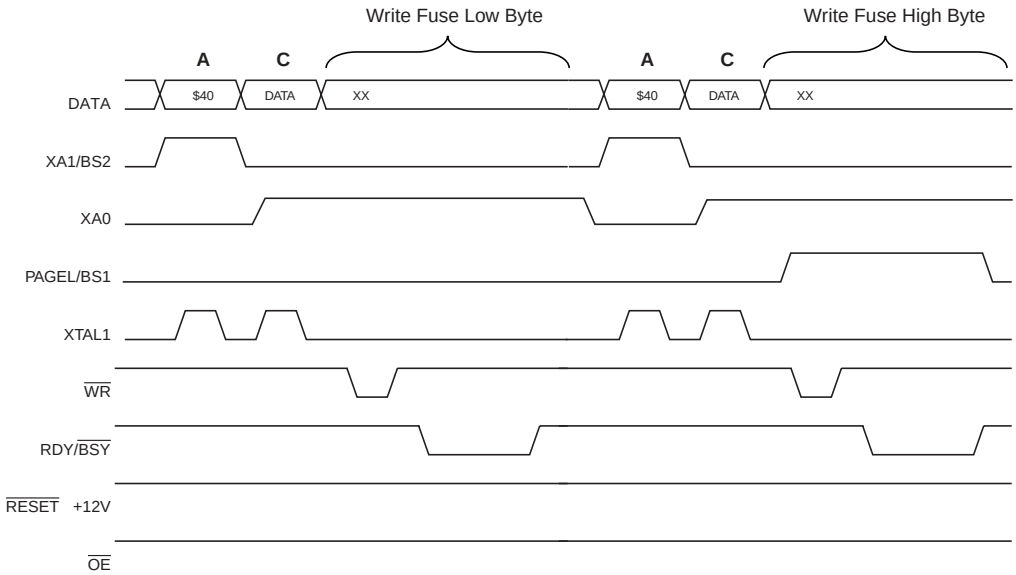

Programming the Lock Bits

The algorithm for programming the Lock bits is as follows (refer to “Programming the Flash” on page 112 for details on Command and Data loading):

1. A: Load Command “0010 0000”.
2. C: Load Data Low Byte. Bit n = “0” programs the Lock bit.
3. Give $\overline{WR}$ a negative pulse and wait for RDY/$\overline{BSY}$ to go high.

The Lock bits can only be cleared by executing Chip Erase.

Reading the Fuse and Lock Bits

The algorithm for reading the Fuse and Lock bits is as follows (refer to “Programming the Flash” on page 112 for details on Command loading):

1. A: Load Command “0000 0100”.
2. Set $\overline{OE}$ to “0”, BS2 to “0”, and BS1 to “0”. The status of the Fuse Low bits can now be read at DATA (“0” means programmed).
3. Set $\overline{OE}$ to “0”, BS2 to “1”, and BS1 to “1”. The status of the Fuse High bits can now be read at DATA (“0” means programmed).
4. Set $\overline{OE}$ to “0”, BS2 to “0”, and BS1 to “1”. The status of the Lock bits can now be read at DATA (“0” means programmed).
5. Set $\overline{OE}$ to “1”.

Figure 63. Mapping Between BS1, BS2 and the Fuse- and Lock-bits During Read

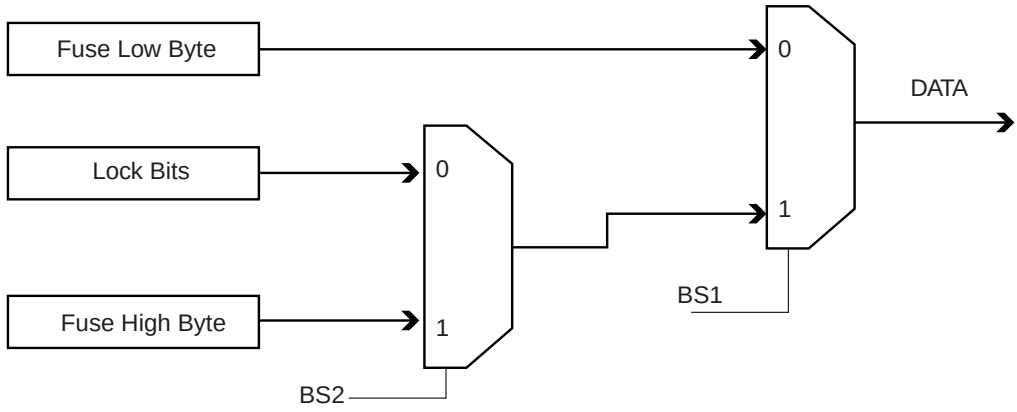

Reading the Signature Bytes

The algorithm for reading the Signature bytes is as follows (refer to Programming the Flash for details on Command and Address loading):

1. A: Load Command “0000 1000”.
2. B: Load Address Low Byte ($00 - $02).
3. Set $\overline{OE}$ to “0” and BS1 to “0”. The selected Signature byte can now be read at DATA.
4. Set $\overline{OE}$ to “1”.

Reading the Calibration Byte

The algorithm for reading the Calibration byte is as follows (refer to Programming the Flash for details on Command and Address loading):

1. A: Load Command “0000 1000”.
2. B: Load Address Low Byte.
3. Set $\overline{OE}$ to “0” and BS1 to “1”. The Calibration byte can now be read at DATA.
4. Set $\overline{OE}$ to “1”.

Parallel Programming Characteristics

Figure 64. Parallel Programming Timing, Including some General Timing Requirements

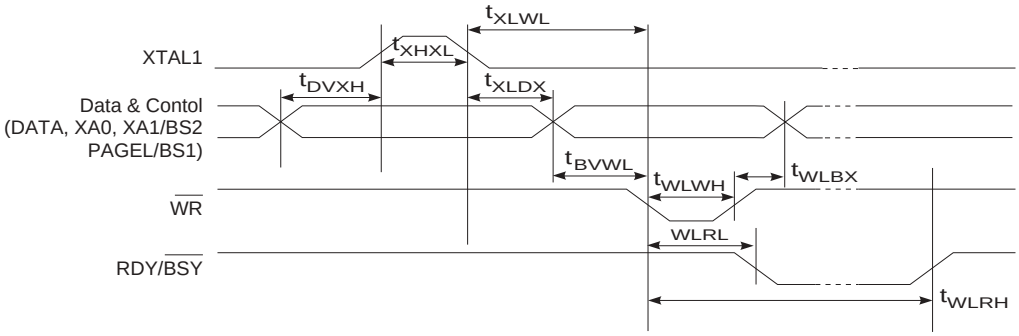

Figure 65. Parallel Programming Timing, Loading Sequence with Timing Requirements(1)

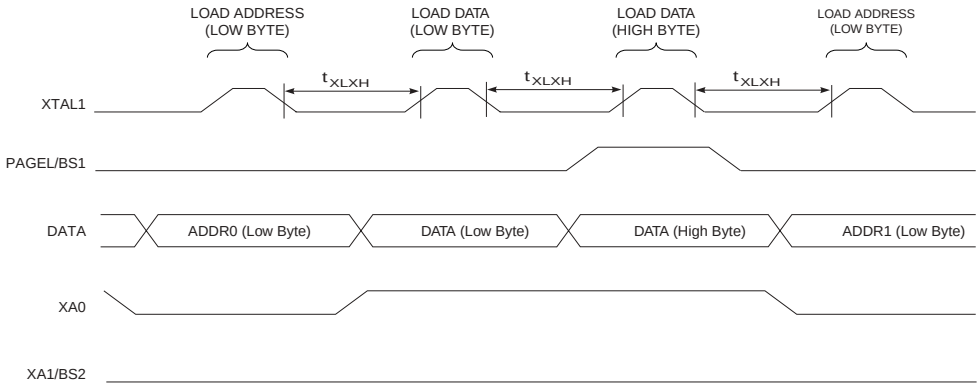

Note: 1. The timing requirements shown in Figure 64 (i.e., t_{DVXH}, t_{XHXL}, and t_{XLDX}) also apply to loading operation.

Figure 66. Parallel Programming Timing, Reading Sequence (Within the Same Page) with Timing Requirements()

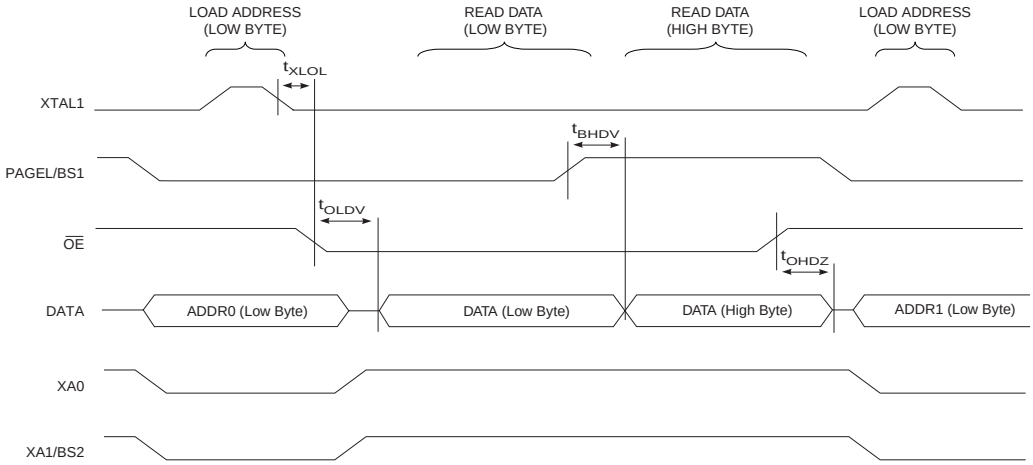

Note: 1. The timing requirements shown in Figure 64 (i.e. t_{DVXH}, t_{XHXL}, and t_{XLDX}) also apply to reading operation.

Table 57. Parallel Programming Characteristics, V_{CC} = 5V ± 10%

Symbol	Parameter	Min	Typ	Max	Units
V_{PP}	Programming Enable Voltage	11.5		12.5	V
I_{PP}	Programming Enable Current			250	µA
t_{DVXH}	Data and Control Valid before XTAL1 High	67			ns
t_{XLXH}	XTAL1 Low to XTAL1 High	200			ns
t_{XHXL}	XTAL1 Pulse Width High	150			ns
t_{XLDX}	Data and Control Hold after XTAL1 Low	67			ns
t_{XLWL}	XTAL1 Low to $\overline{WR}$ Low	0			ns
t_{WLBX}	BS2/1 Hold after $\overline{WR}$ Low	67			ns
t_{BVWL}	BS1 Valid to $\overline{WR}$ Low	67			ns
t_{WLWH}	$\overline{WR}$ Pulse Width Low	150			ns
t_{WLRL}	$\overline{WR}$ Low to RDY/$\overline{BSY}$ Low	0		1	µs
t_{WLRH}	$\overline{WR}$ Low to RDY/$\overline{BSY}$ High(1)	3.7		4.5	ms
t_{WLRH_CE}	$\overline{WR}$ Low to RDY/$\overline{BSY}$ High for Chip Erase(2)	7.5		9	ms
t_{XLOL}	XTAL1 Low to $\overline{OE}$ Low	0			ns
t_{BVDV}	BS1 Valid to DATA valid	0		250	ns
t_{OLDV}	$\overline{OE}$ Low to DATA Valid			250	ns
t_{OHDZ}	$\overline{OE}$ High to DATA Tri-stated			250	ns

Notes: 1. t_{WLRH} is valid for the Write Flash, Write EEPROM, Write Fuse bits and Write Lock bits commands.
2. t_{WLRH_CE} is valid for the Chip Erase command.

Serial Downloading

Both the Flash and EEPROM memory arrays can be programmed using the serial SPI bus while $\overline{\text{RESET}}$ is pulled to GND. The serial interface consists of pins SCK, MOSI (input) and MISO (output). After $\overline{\text{RESET}}$ is set low, the Programming Enable instruction needs to be executed first before program/erase operations can be executed. NOTE, in Table 58 on page 120, the pin mapping for SPI programming is listed. Not all parts use the SPI pins dedicated for the internal SPI interface. Note that throughout the description about Serial downloading, MOSI and MISO are used to describe the serial data in and serial data out respectively.

Serial Programming Pin Mapping

Table 58. Pin Mapping Serial Programming

Symbol	Pins	I/O	Description
MOSI	PB0	I	Serial data in
MISO	PB1	O	Serial data out
SCK	PB2	I	Serial clock

Figure 67. Serial Programming and Verify(1)

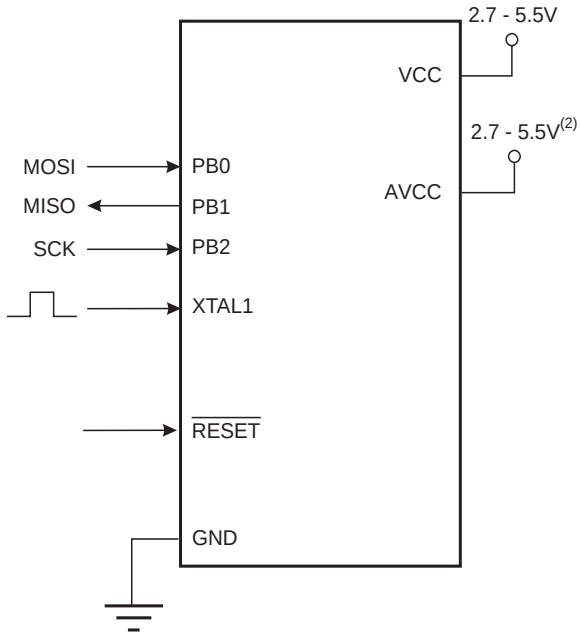

Notes: 1. If the device is clocked by the internal oscillator, there is no need to connect a clock source to the XTAL1 pin.
2. V_{CC} -0.3V < AVCC < V_{CC} +0.3V, however, AVCC should always be within 2.7 - 5.5V.

When programming the EEPROM, an auto-erase cycle is built into the self-timed programming operation (in the serial mode ONLY) and there is no need to first execute the Chip Erase instruction. The Chip Erase operation turns the content of every memory location in both the Program and EEPROM arrays into $FF.

Depending on CKSEL Fuses, a valid clock must be present. The minimum low and high periods for the serial clock (SCK) input are defined as follows:

Low: > 2 CPU clock cycles for f_{ck} < 12 MHz, 3 CPU clock cycles for $f_{ck} \geq$ 12 MHz

High: > 2 CPU clock cycles for f_{ck} < 12 MHz, 3 CPU clock cycles for $f_{ck} \geq$ 12 MHz

SPI Serial Programming Algorithm

When writing serial data to the ATtiny26, data is clocked on the rising edge of SCK.

When reading data from the ATtiny26, data is clocked on the falling edge of SCK. See Figure 68, Figure 69, and Table 69 for timing details.

To program and verify the ATtiny26 in the serial programming mode, the following sequence is recommended (See four byte instruction formats in Table 60):

1. Power-up sequence:
   Apply power between V_{CC} and GND while $\overline{\text{RESET}}$ and SCK are set to “0”. In some systems, the programmer can not guarantee that SCK is held low during Power-up. In this case, $\overline{\text{RESET}}$ must be given a positive pulse of at least two CPU clock cycles duration after SCK has been set to “0”.
2. Wait for at least 20 ms and enable serial programming by sending the Programming Enable serial instruction to pin MOSI.
3. The serial programming instructions will not work if the communication is out of synchronization. When in synchronize the second byte ($53), will echo back when issuing the third byte of the Programming Enable instruction. Whether the echo is correct or not, all 4 bytes of the instruction must be transmitted. If the $53 did not echo back, give $\overline{\text{RESET}}$ a positive pulse and issue a new Programming Enable command.
4. The Flash is programmed one page at a time. The page size is found in Table 55 on page 110. The memory page is loaded one byte at a time by supplying the 4 LSB of the address and data together with the Load Program Memory Page instruction. To ensure correct loading of the page, the data low byte must be loaded before data high byte is applied for given address. The Program Memory Page is stored by loading the Write Program Memory Page instruction with the 6 MSB of the address. If polling is not used, the user must wait at least t_{WD_FLASH} before issuing the next page. (See Table 59). Accessing the serial programming interface before the Flash write operation completes can result in incorrect programming.
5. The EEPROM array is programmed one byte at a time by supplying the address and data together with the appropriate Write instruction. An EEPROM memory location is first automatically erased before new data is written. If polling is not used, the user must wait at least t_{WD_EEPROM} before issuing the next byte. (See Table 59). In a chip erased device, no $FFs in the data file(s) need to be programmed.
6. Any memory location can be verified by using the Read instruction which returns the content at the selected address at serial output MISO.
7. At the end of the programming session, $\overline{\text{RESET}}$ can be set high to commence normal operation.
8. Power-off sequence (if needed):
   Set $\overline{\text{RESET}}$ to “1”.
   Turn V_{CC} power off.

Data Polling Flash

When a page is being programmed into the Flash, reading an address location within the page being programmed will give the value $FF. At the time the device is ready for a new page, the programmed value will read correctly. This is used to determine when the next page can be written. Note that the entire page is written simultaneously and any address within the page can be used for polling. Data polling of the Flash will not work for the value $FF, so when programming this value, the user will have to wait for at least t_{WD_FLASH} before programming the next page. As a chip-erased device contains $FF in all locations, programming of addresses that are meant to contain $FF, can be skipped. See Table 59 for t_{WD_FLASH} value.

Data Polling EEPROM

When a new byte has been written and is being programmed into EEPROM, reading the address location being programmed will give the value $FF. At the time the device is ready for a new byte, the programmed value will read correctly. This is used to determine when the next byte can be written. This will not work for the value $FF, but the user should have the following in mind: As a chip-erased device contains $FF in all locations, programming of addresses that are meant to contain $FF, can be skipped. This does not apply if the EEPROM is re-programmed without chip-erasing the device. In this case, data polling cannot be used for the value $FF, and the user will have to wait at least t_{WD_EEPROM} before programming the next byte. See Table 59 for t_{WD_EEPROM} value.

Table 59. Minimum Wait Delay before Writing the Next Flash or EEPROM Location

Symbol	Minimum Wait Delay
t_{WD_FLASH}	4.5 ms
t_{WD_EEPROM}	9.0 ms
t_{WD_ERASE}	9.0 ms
t_{WD_FUSE}	4.5 ms

Figure 68. Serial Programming Waveforms

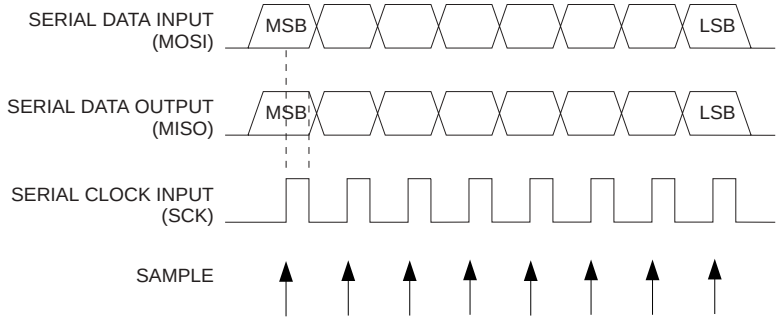

Table 60. Serial Programming Instruction Set

Instruction	Instruction Format				Operation
	Byte 1	Byte 2	Byte 3	Byte4	
Programming Enable	1010 1100	0101 0011	xxxx xxxx	xxxx xxxx	Enable Serial Programming after $\overline{\text{RESET}}$ goes low.
Chip Erase	1010 1100	100x xxxx	xxxx xxxx	xxxx xxxx	Chip Erase EEPROM and Flash.
Read Program Memory	0010 **H**000	xxxx xx**aa**	**bbbb bbbb**	**oooo oooo**	Read **H** (high or low) data **o** from Program memory at word address **a**:**b**.
Load Program Memory Page	0100 **H**000	xxxx xxxx	xxxx **bbbb**	**iiii iiii**	Write **H** (high or low) data **i** to Program Memory page at word address **b**. Data low byte must be loaded before data high byte is applied within the same address.
Write Program Memory Page	0100 1100	xxxx xx**aa**	**bbbb** xxxx	xxxx xxxx	Write Program Memory Page at address **a**:**b**.
Read EEPROM Memory	1010 0000	xxxx xxxx	x**bbb bbbb**	**oooo oooo**	Read data **o** from EEPROM memory at address **b**.
Write EEPROM Memory	1100 0000	xxxx xxxx	x**bbb bbbb**	**iiii iiii**	Write data **i** to EEPROM memory at address **b**.
Read Lock Bits	0101 1000	0000 0000	xxxx xxxx	xxxx **xxoo**	Read Lock bits. “0” = programmed, “1” = unprogrammed. See Table 47 on page 106 for details.
Write Lock Bits	1010 1100	111x xxxx	xxxx xxxx	1111 11**ii**	Write Lock bits. Set bits = “0” to program Lock bits. See Table 47 on page 106 for details.
Read Signature Byte	0011 0000	xxxx xxxx	xxxx xx**bb**	**oooo oooo**	Read Signature Byte **o** at address **b**.
Write Fuse Bits	1010 1100	1010 0000	xxxx xxxx	**iiii iiii**	Set bits = “0” to program, “1” to unprogram. See Table 50 on page 107 for details.
Write Fuse High Bits	1010 1100	1010 1000	xxxx xxxx	xxx**i iiii**	Set bits = “0” to program, “1” to unprogram. See Table 49 on page 107 for details.
Read Fuse Bits	0101 0000	0000 0000	xxxx xxxx	**oooo oooo**	Read Fuse bits. “0” = programmed, “1” = unprogrammed. See Table 50 on page 107 for details.
Read Fuse High Bits	0101 1000	0000 1000	xxxx xxxx	xxx**o oooo**	Read Fuse high bits. “0” = programmed, “1” = unprogrammed. See Table 49 on page 107 for details.
Read Calibration Byte	0011 1000	xxxx xxxx	0000 00**bb**	**oooo oooo**	Read Calibration Byte **o**.

Note: **a** = address high bits
b = address low bits
H = 0 – Low byte, 1 – High Byte
o = data out
i = data in
x = don’t care

Serial Programming Characteristics

Figure 69. Serial Programming Timing

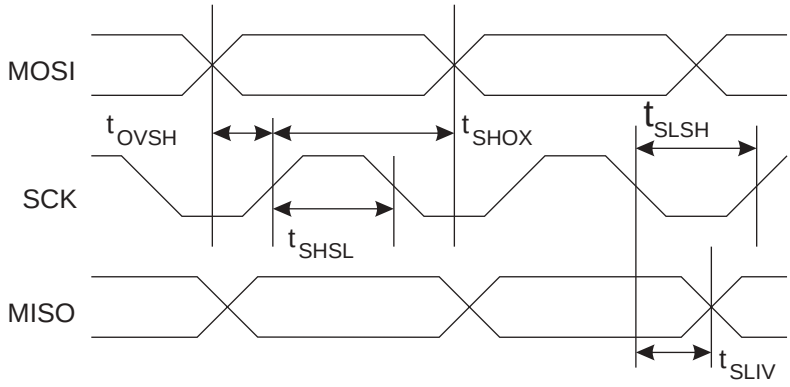

Table 61. Serial Programming Characteristics, T_A = -40°C to 85°C, V_{CC} = 2.7V - 5.5V (Unless Otherwise Noted)[1]

Symbol	Parameter	Min	Typ	Max	Units
$1/t_{CLCL}$	Oscillator Frequency (V_{CC} = 2.7 - 5.5 V)	0		8	MHz
t_{CLCL}	Oscillator Period (V_{CC} = 2.7 - 5.5 V)	125			ns
$1/t_{CLCL}$	Oscillator Frequency (V_{CC} = 4.5 - 5.5 V)	0		16	MHz
t_{CLCL}	Oscillator Period (V_{CC} = 4.5 - 5.5 V)	62.5			ns
t_{SHSL}	SCK Pulse Width High	2 t_{CLCL}[1]			ns
t_{SLSH}	SCK Pulse Width Low	2 t_{CLCL}[1]			ns
t_{OVSH}	MOSI Setup to SCK High	t_{CLCL}			ns
t_{SHOX}	MOSI Hold after SCK High	2 t_{CLCL}			ns
t_{SLIV}	SCK Low to MISO Valid		20		ns

Note: 1. 2 t_{CLCL} for f_{ck} < 12 MHz, 3 t_{CLCL} for f_{ck} >= 12 MHz

Electrical Characteristics

Absolute Maximum Ratings*

Operating Temperature ..... -55°C to +125°C

Storage Temperature ..... -65°C to +150°C

Voltage on Any Pin except $\overline{RESET}$ with Respect to Ground .....-1.0V to V_{CC} + 0.5V

Voltage on $\overline{RESET}$ with Respect to Ground ....-1.0V to +13.0V

Maximum Operating Voltage 6.0V

DC Current per I/O Pin ..... 40.0 mA

DC Current V_{CC} and GND Pins ..... 200.0 mA

*NOTICE: Stresses beyond those listed under “Absolute Maximum Ratings” may cause permanent damage to the device. This is a stress rating only and functional operation of the device at these or other conditions beyond those indicated in the operational sections of this specification is not implied. Exposure to absolute maximum rating conditions for extended periods may affect device reliability.

DC Characteristics T_A = -40°C to 85°C, V_{CC} = 2.7V to 5.5V (unless otherwise noted)

Symbol	Parameter	Condition	Min.	Typ.	Max.	Units
V_{IL}	Input Low Voltage	Except XTAL1 pin	-0.5		$0.2V_{CC}$	V
V_{IL1}	Input Low Voltage	XTAL1 pin, External Clock Selected	-0.5		$0.1V_{CC}$	V
V_{IH}	Input High Voltage	Except XTAL1 and $\overline{RESET}$ pins	$0.6V_{CC}$(3)		V_{CC} +0.5	V
V_{IH1}	Input High Voltage	XTAL1 pin, External Clock Selected	$0.8V_{CC}$(3)		V_{CC} +0.5	V
V_{IH2}	Input High Voltage	$\overline{RESET}$ pin	$0.9V_{CC}$(3)		V_{CC} +0.5	V
V_{OL}	Output Low Voltage(4) (Ports A, B)	I_{OL} = 20 mA, V_{CC} = 5V I_{OL} = 10 mA, V_{CC} = 3V			0.7 0.5	V V
V_{OH}	Output High Voltage(5) (Ports A, B)	I_{OH} = -20 mA, V_{CC} = 5V I_{OH} = -10 mA, V_{CC} = 3V	4.2 2.3			V V
I_{IL}	Input Leakage Current I/O Pin	Vcc = 5.5V, pin low (absolute value)			1	µA
I_{IH}	Input Leakage Current I/O Pin	Vcc = 5.5V, pin high (absolute value)			1	µA
R_{RST}	Reset Pull-up Resistor		20		100	kΩ
R_{pu}	I/O Pin Pull-up Resistor		20		100	kΩ

DC Characteristics T_A = -40°C to 85°C, V_{CC} = 2.7V to 5.5V (unless otherwise noted) (Continued)

Symbol	Parameter	Condition	Min.	Typ.	Max.	Units
I_{CC}	Power Supply Current	Active 1 MHz, V_{CC} = 3V (ATtiny26L)		0.70[1]		mA
		Active 4 MHz, V_{CC} = 3V (ATtiny26L)		2.5[1]	6	mA
		Active 8 MHz, V_{CC} = 5V (ATtiny26)		8[1]	15	mA
		Idle 1 MHz, V_{CC} = 3V (ATtiny26L)		0.18[1]		mA
		Idle 4 MHz, V_{CC} = 3V (ATtiny26L)		0.75[1]	2	mA
		Idle 8 MHz, V_{CC} = 5V (ATtiny26)		3.5[1]	7	mA
	Power-down mode[6]	WDT enabled, V_{CC} = 3V		7.5[1]	15	µA
		WDT disabled, V_{CC} = 3V		0.3[1]	3	µA
V_{ACIO}	Analog Comparator Input Offset Voltage	V_{CC} = 5V V_{in} = V_{CC}/2		<10	40	mV
I_{ACLK}	Analog Comparator Input Leakage Current	V_{CC} = 5V V_{in} = V_{CC}/2	-50		50	nA
t_{ACID}	Analog Comparator Propagation Delay	V_{CC} = 2.7V V_{CC} = 4.0V		750 500		ns

Notes:
1. Typical value at 25°C.
2. “Max” means the highest value where the pin is guaranteed to be read as low
3. “Min” means the lowest value where the pin is guaranteed to be read as high
4. Although each I/O port can sink more than the test conditions (20mA at Vcc = 5V, 10 mA at Vcc = 3V) under steady state conditions (non-transient), the following must be observed:
   1] The sum of all IOL, for all ports, should not exceed 400 mA.
   2] The sum of all IOL, for port A0 - A7, should not exceed 300 mA.
   3] The sum of all IOL, for ports B0 - B7 should not exceed 300 mA.
   If IOL exceeds the test condition, VOL may exceed the related specification. Pins are not guaranteed to sink current greater than the listed test condition.
5. Although each I/O port can source more than the test conditions (20 mA at V_{CC} = 5V, 10 mA at V_{CC} = 3V) under steady state conditions (non-transient), the following must be observed:
   1] The sum of all IOH, for all ports, should not exceed 400 mA.
   2] The sum of all IOH, for port A0 - A7, should not exceed 300 mA.
   3] The sum of all IOH, for ports B0 - B7 should not exceed 300 mA.
   If IOH exceeds the test condition, VOH may exceed the related specification. Pins are not guaranteed to source current greater than the listed test condition.
6. Minimum V_{CC} for Power-down is 2.5V.

External Clock Drive Waveforms

Figure 70. External Clock Drive Waveforms

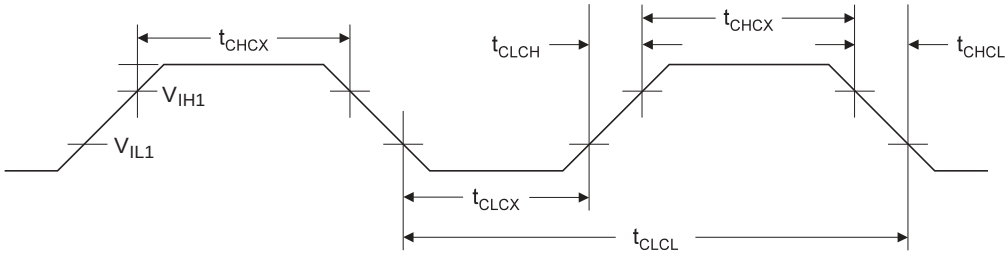

External Clock Drive

Table 62. External Clock Drive

Symbol	Parameter	V_{CC} = 2.7 - 5.5V		V_{CC} = 4.5 - 5.5V		Units
		Min	Max	Min	Max	
$1/t_{CLCL}$	Oscillator Frequency	0	8	0	16	MHz
t_{CLCL}	Clock Period	125		62.5		ns
t_{CHCX}	High Time	50		25		ns
t_{CLCX}	Low Time	50		25		ns
t_{CLCH}	Rise Time		1.6		0.5	µs
t_{CHCL}	Fall Time		1.6		0.5	µs
Δt_{CLCL}	Change in period from one clock cycle to the next		2		2	

ADC Characteristics

Table 63. ADC Characteristics, Single Ended Channels, T_A = -40°C to 85°C

Symbol	Parameter	Condition	Min	Typ	Max	Units
	Resolution	Single Ended Conversion		10		Bits
	Absolute Accuracy (Including INL, DNL, Quantization Error, Gain and Offset Error)	Single Ended Conversion V_{REF} = 4V, V_{CC} = 4V ADC clock = 200 kHz		1		LSB
		Single Ended Conversion V_{REF} = 4V, V_{CC} = 4V ADC clock = 1 MHz		2		LSB
		Single Ended Conversion V_{REF} = 4V, V_{CC} = 4V ADC clock = 200 kHz Noise Reduction mode		1		LSB
		Single Ended Conversion V_{REF} = 4V, V_{CC} = 4V ADC clock = 1 MHz Noise Reduction mode		2		LSB
	Integral Non-Linearity (INL)	Single Ended Conversion V_{REF} = 4V, V_{CC} = 4V ADC clock = 200 kHz		0.5		LSB
	Differential Non-Linearity (DNL)	Single Ended Conversion V_{REF} = 4V, V_{CC} = 4V ADC clock = 200 kHz		0.5		LSB
	Gain Error	Single Ended Conversion V_{REF} = 4V, V_{CC} = 4V ADC clock = 200 kHz		0.75		LSB
	Offset error	Single Ended Conversion V_{REF} = 4V, V_{CC} = 4V ADC clock = 200 kHz		0.5		LSB
	Clock Frequency		50		1000	kHz
	Conversion Time		13		260	µs
AVCC	Analog Supply Voltage		V_{CC} - 0.3(1)		V_{CC} + 0.3(2)	V
V_{REF}	Reference Voltage		2.0		AVCC	V
V_{IN}	Input Voltage		GND		V_{REF}	V
	ADC Conversion Output		0		1023	LSB
	Input Bandwidth			38.5		kHz
V_{INT}	Internal Voltage Reference		2.3	2.56	2.7	V
R_{REF}	Reference Input Resistance			32		kΩ
R_{AIN}	Analog Input Resistance			100		MΩ

Note: 1. Minimum for AVCC is 2.7V.
2. Maximum for AVCC is 5.5V

Table 64. ADC Characteristics, Differential Channels, T_A = -40°C to 85°C

Symbol	Parameter	Condition	Min	Typ	Max	Units
	Resolution	Gain = 1x			10	Bits
		Gain = 20x			10	Bits
	Absolute Accuracy	Gain = 1x V_{REF} = 4V, V_{CC} = 5V ADC clock = 50 - 200 kHz		24		LSB
		Gain = 20x V_{REF} = 4V, V_{CC} = 5V ADC clock = 50 - 200 kHz		27		LSB
	Integral Non-Linearity (INL) (Accuracy after Calibration for Offset and Gain Error)	Gain = 1x V_{REF} = 4V, V_{CC} = 5V ADC clock = 50 - 200 kHz		1.5		LSB
		Gain = 20x V_{REF} = 4V, V_{CC} = 5V ADC clock = 50 - 200 kHz		2		LSB
	Gain Error	Gain = 1x		2		%
		Gain = 20x		2.5		%
	Offset Error	Gain = 1x V_{REF} = 4V, V_{CC} = 5V ADC clock = 50 - 200 kHz		4		LSB
		Gain = 20x V_{REF} = 4V, V_{CC} = 5V ADC clock = 50 - 200 kHz		6		LSB
	Clock Frequency		50		200	kHz
	Conversion Time		26		65	µs
AVCC	Analog Supply Voltage		V_{CC} - 0.3(1)		V_{CC} + 0.3(2)	V
V_{REF}	Reference Voltage		2.0		AVCC - 0.5	V
V_{IN}	Input Voltage		GND		V_{CC}	V
V_{DIFF}	Input Differential Voltage		0		V_{REF}/Gain	V
	ADC Conversion Output		0		1023	LSB
	Input Bandwidth			4		kHz
V_{INT}	Internal Voltage Reference		2.3	2.56	2.7	V
R_{REF}	Reference Input Resistance			32		kΩ
R_{AIN}	Analog Input Resistance			100		MΩ

Notes: 1. Minimum for AVCC is 2.7V.
2. Maximum for AVCC is 5.5V.

ATtiny26 Typical Characteristics

The following charts show typical behavior. These figures are not tested during manufacturing. All current consumption measurements are performed with all I/O pins configured as inputs and with internal pull-ups enabled. A sine wave generator with rail-to-rail output is used as clock source.

The power consumption in Power-down mode is independent of clock selection.

The current consumption is a function of several factors such as: operating voltage, operating frequency, loading of I/O pins, switching rate of I/O pins, code executed and ambient temperature. The dominating factors are operating voltage and frequency.

The current drawn from capacitive loaded pins may be estimated (for one pin) as C_L*V_{CC}*f where C_L = load capacitance, V_{CC} = operating voltage and f = average switching frequency of I/O pin.

The parts are characterized at frequencies higher than test limits. Parts are not guaranteed to function properly at frequencies higher than the ordering code indicates.

The difference between current consumption in Power-down mode with Watchdog Timer enabled and Power-down mode with Watchdog Timer disabled represents the differential current drawn by the Watchdog Timer.

Active Supply Current

Figure 71. Active Supply Current vs. Frequency (0.1 - 1.0 MHz)

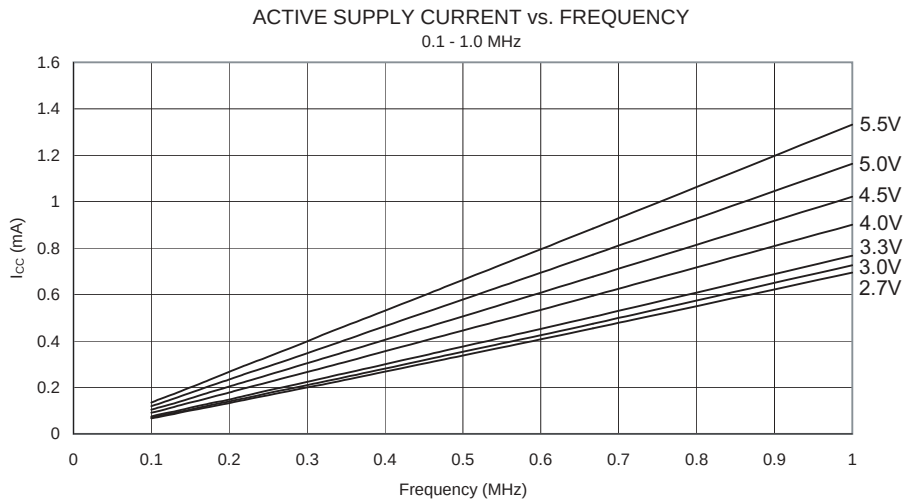

Figure 72. Active Supply Current vs. Frequency (1 - 20 MHz)

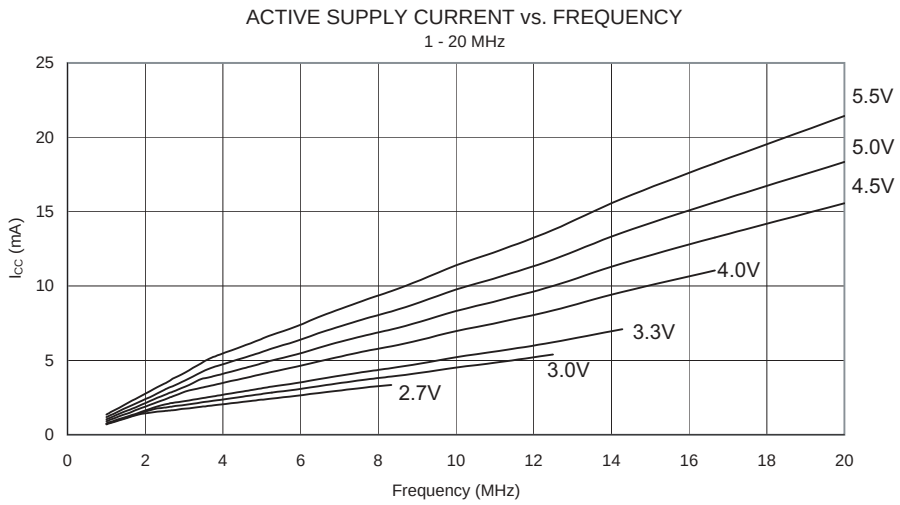

Figure 73. Active Supply Current vs. V_{CC} (Internal RC Oscillator, 8 MHz)

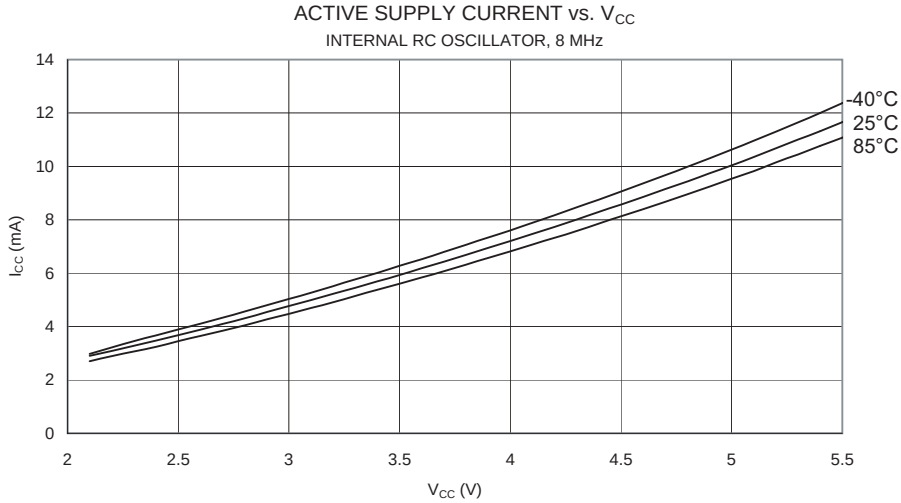

Figure 74. Active Supply Current vs. V_{CC} (Internal RC Oscillator, 4 MHz)

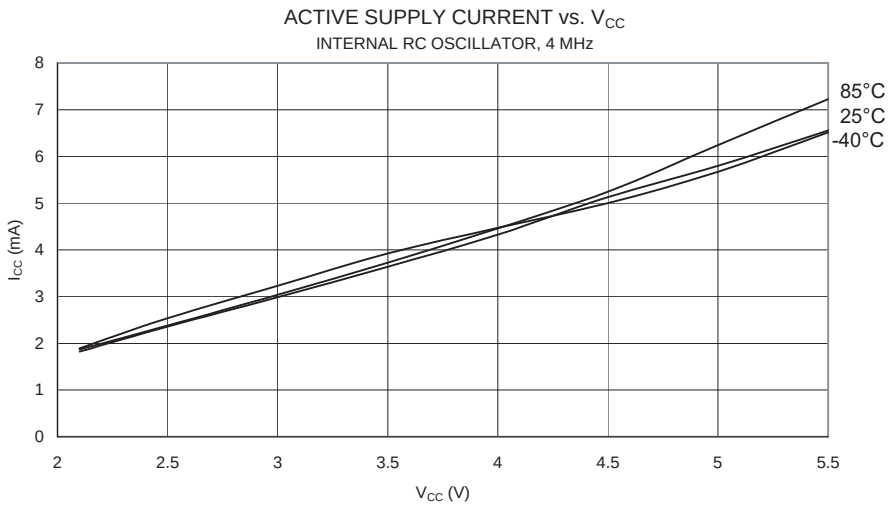

Figure 75. Active Supply Current vs. V_{CC} (Internal RC Oscillator, 2 MHz)

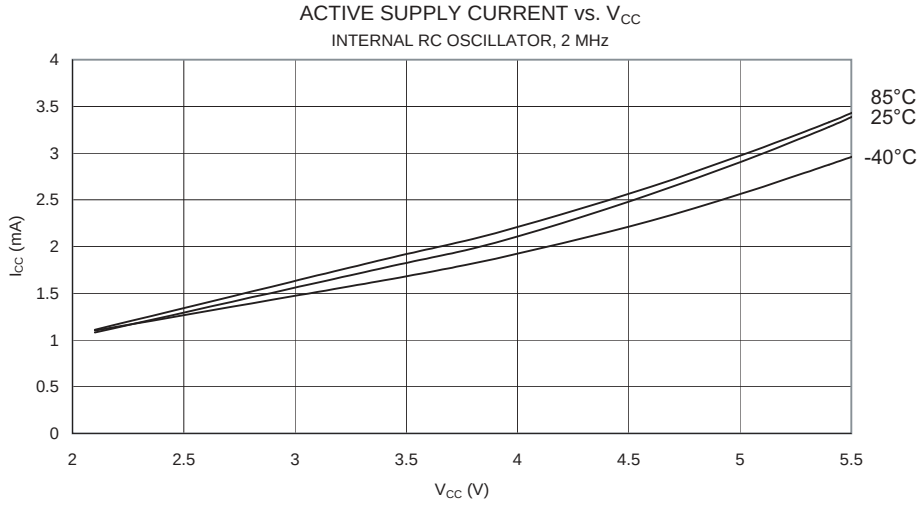

Figure 76. Active Supply Current vs. V_{CC} (Internal RC Oscillator, 1 MHz)

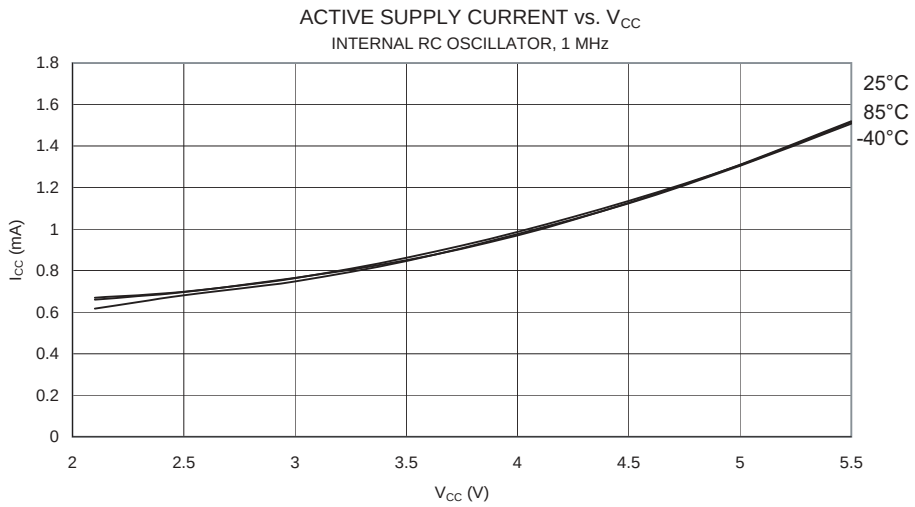

Figure 77. Active Supply Current vs. V_{CC} (PLL Oscillator)

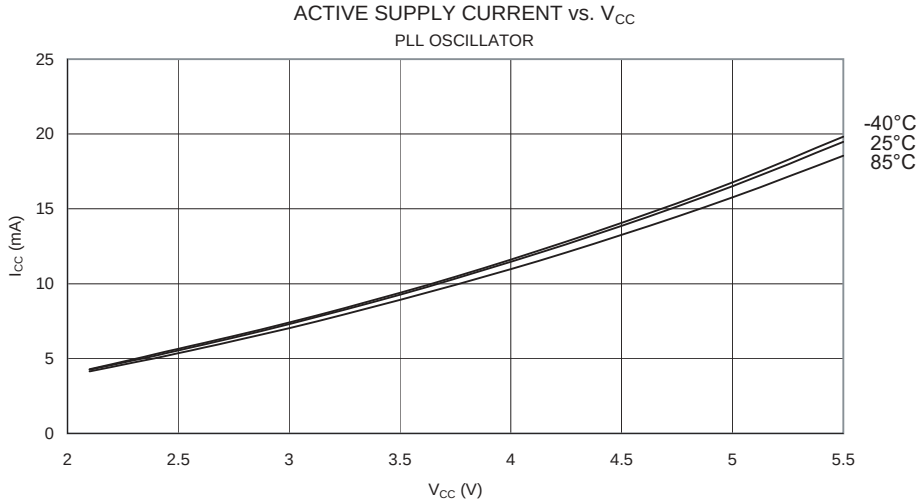

Figure 78. Active Supply Current vs. V_{CC} (32 kHz External Oscillator)

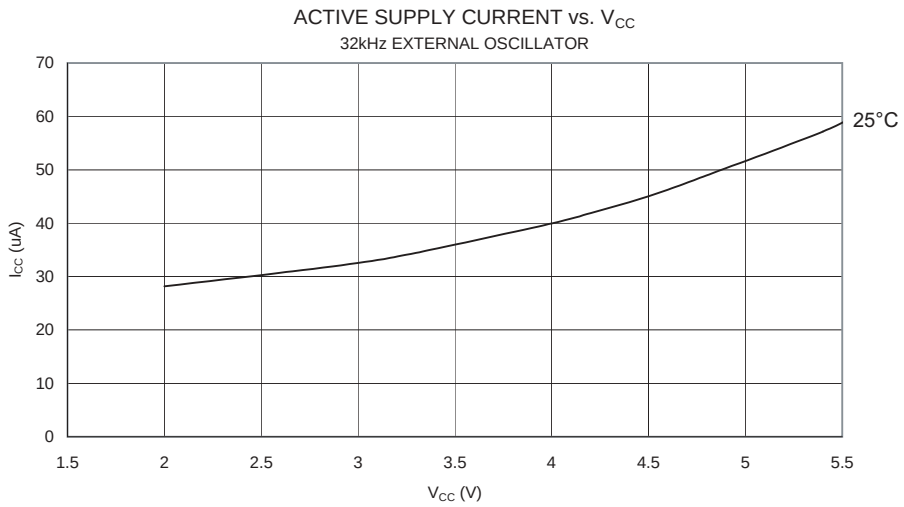

Idle Supply Current

Figure 79. Idle Supply Current vs. Frequency (0.1 - 1.0 MHz)

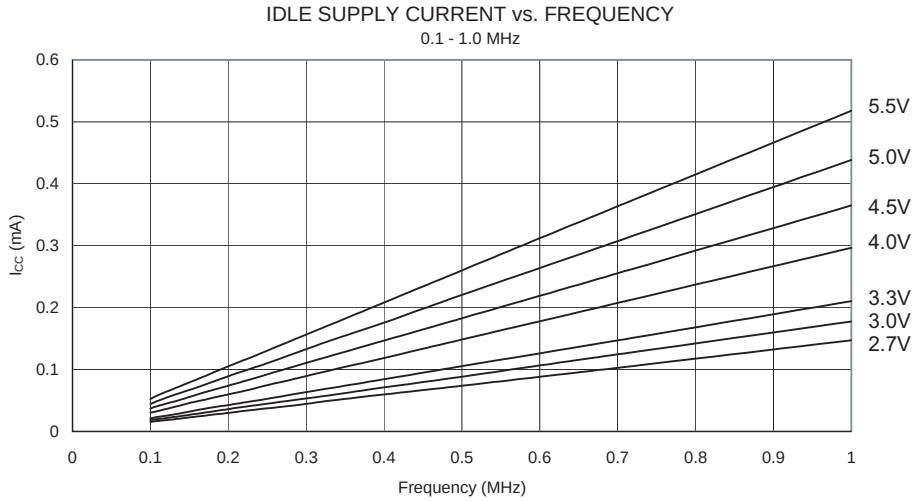

Figure 80. Idle Supply Current vs. Frequency (1 - 20 MHz)

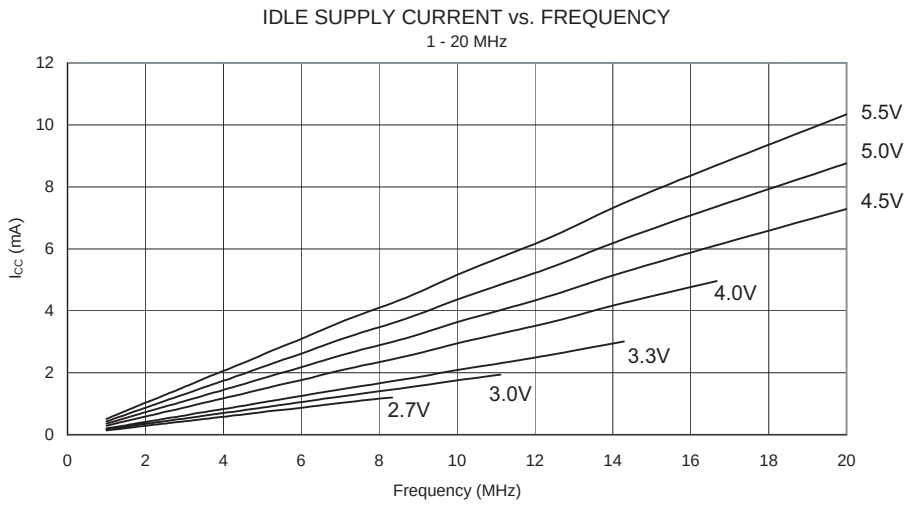

Figure 81. Idle Supply Current vs. V_{CC} (Internal RC Oscillator, 8 MHz)

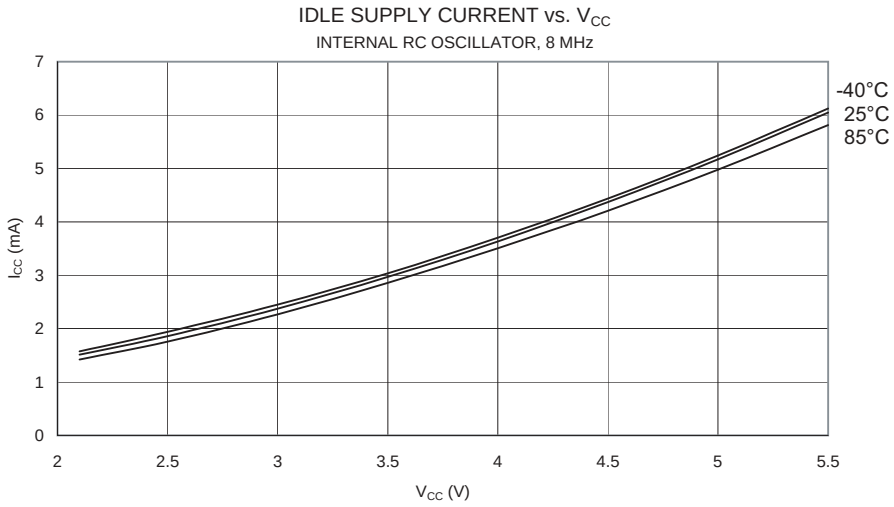

Figure 82. Idle Supply Current vs. V_{CC} (Internal RC Oscillator, 4 MHz)

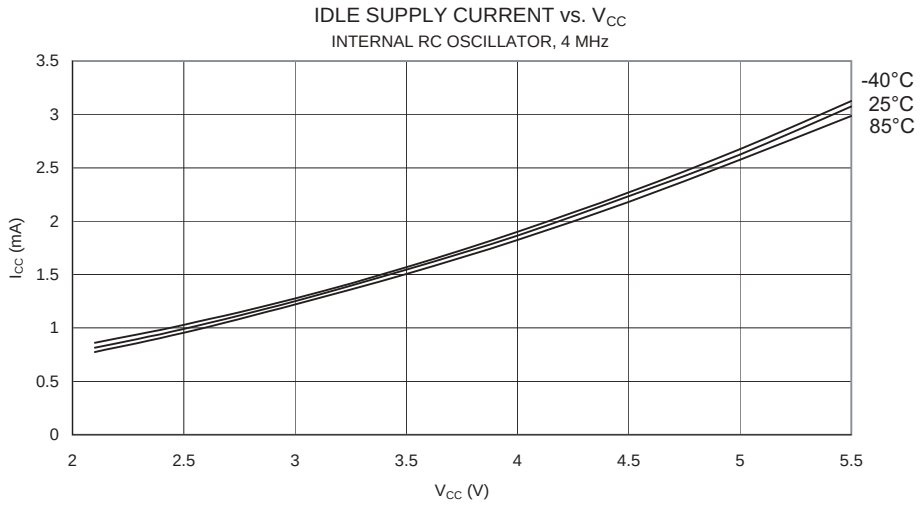

Figure 83. Idle Supply Current vs. V_{CC} (Internal RC Oscillator, 2 MHz)

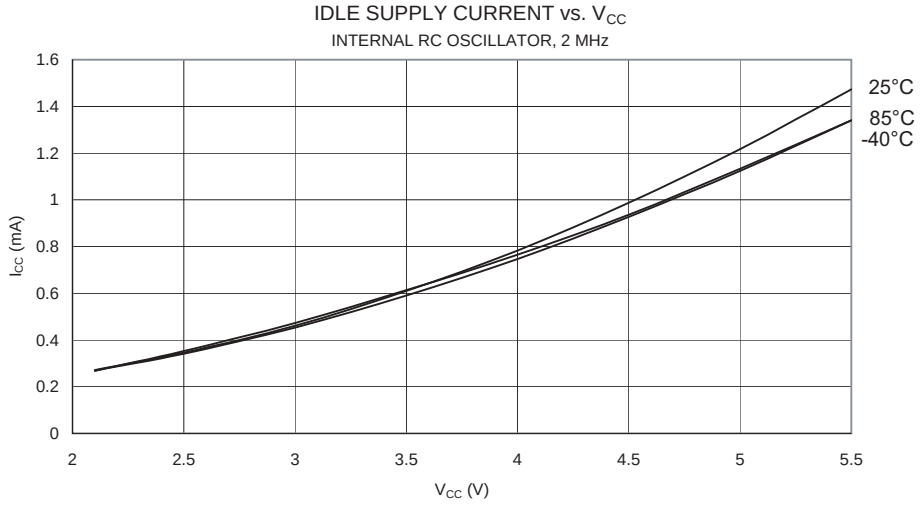

Figure 84. Idle Supply Current vs. V_{CC} (Internal RC Oscillator, 1 MHz)

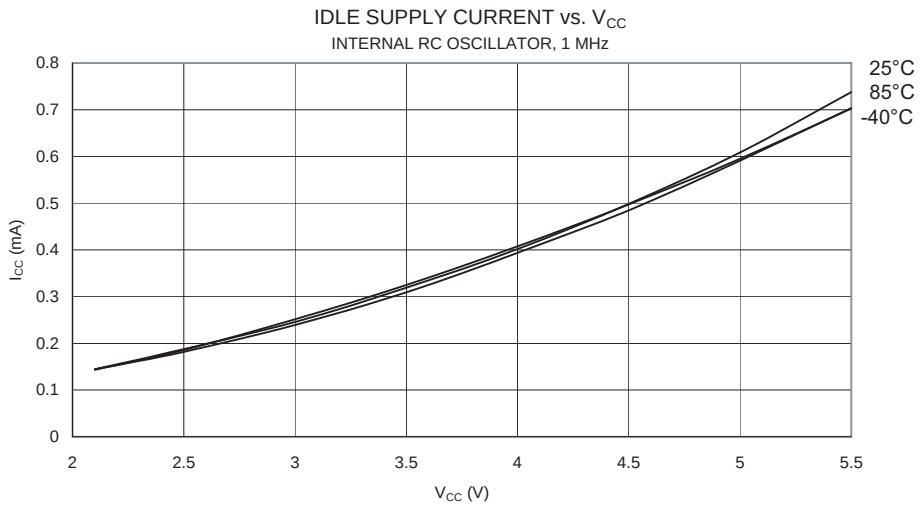

Figure 85. Idle Supply Current vs. V_{CC} (PLL Oscillator)

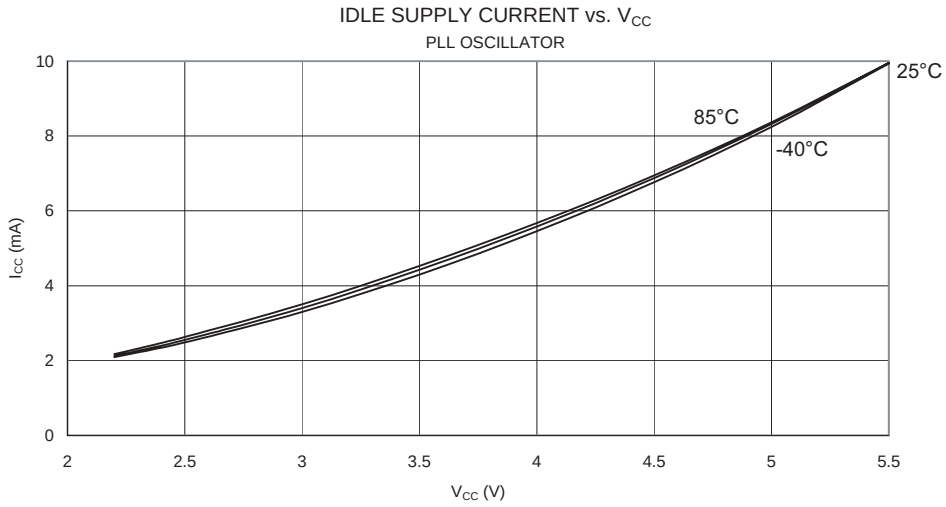

Figure 86. Idle Supply Current vs. V_{CC} (32 kHz External Oscillator)

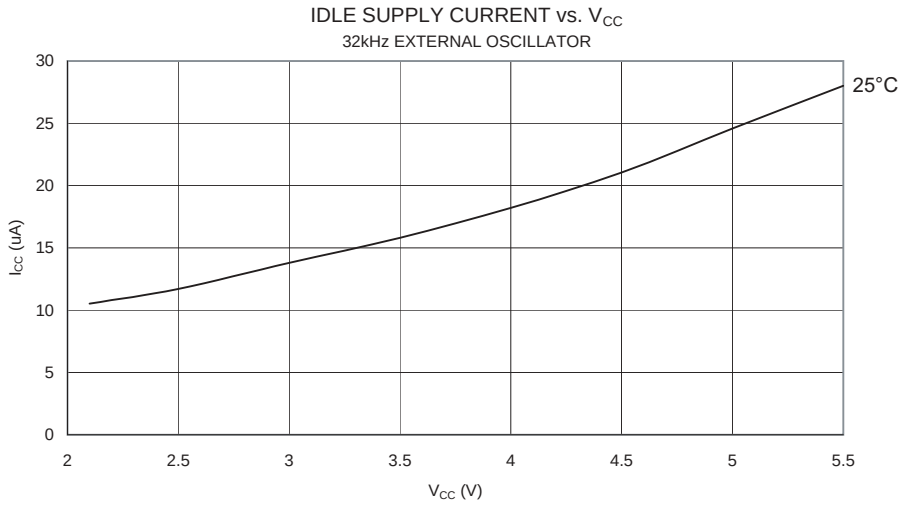

Power-down Supply Current

Figure 87. Power-down Supply Current vs. V_{CC} (Watchdog Timer Disabled)

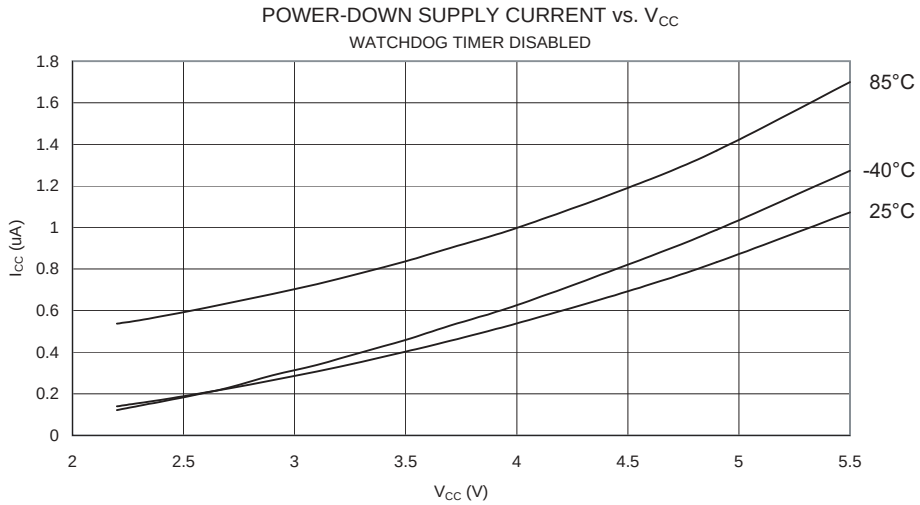

Figure 88. Power-down Supply Current vs. V_{CC} (Watchdog Timer Enabled)

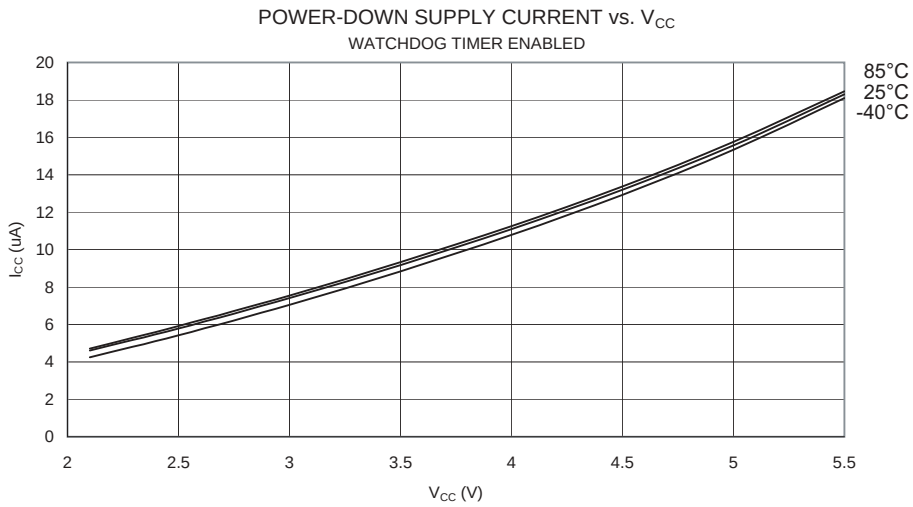

Standby Supply Current

Figure 89. Standby Supply Current vs. V_{CC} (455 kHz Resonator, Watchdog Timer Disabled)

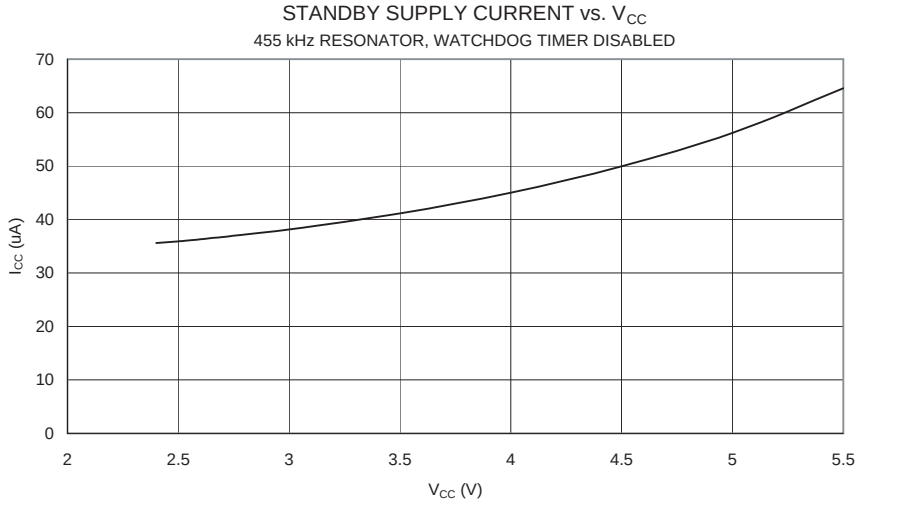

Figure 90. Standby Supply Current vs. V_{CC} (1 MHz Resonator, Watchdog Timer Disabled)

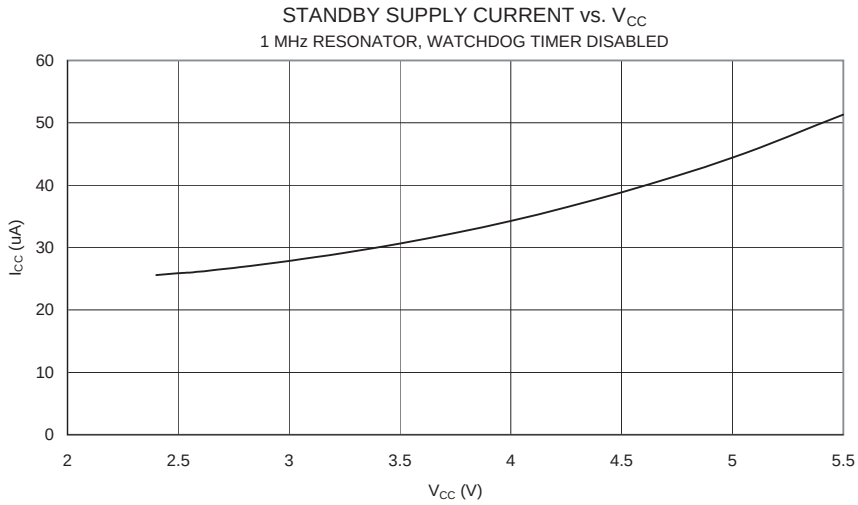

Figure 91. Standby Supply Current vs. V_{CC} (2 MHz Resonator, Watchdog Timer Disabled)

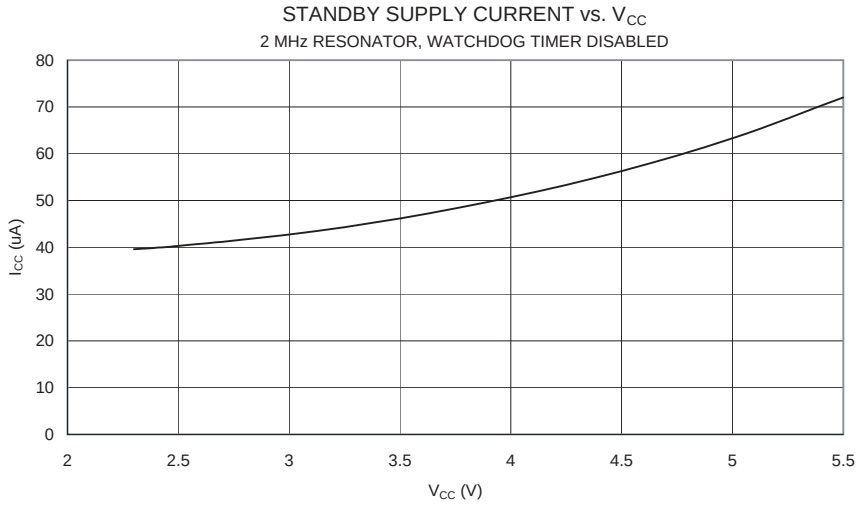

Figure 92. Standby Supply Current vs. V_{CC} (2 MHz XTAL, Watchdog Timer Disabled)

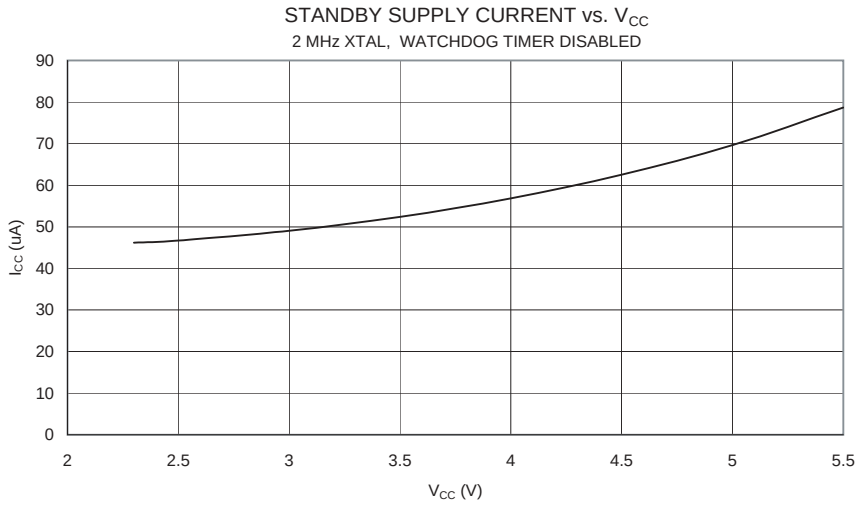

Figure 93. Standby Supply Current vs. V_{CC} (4 MHz Resonator, Watchdog Timer Disabled)

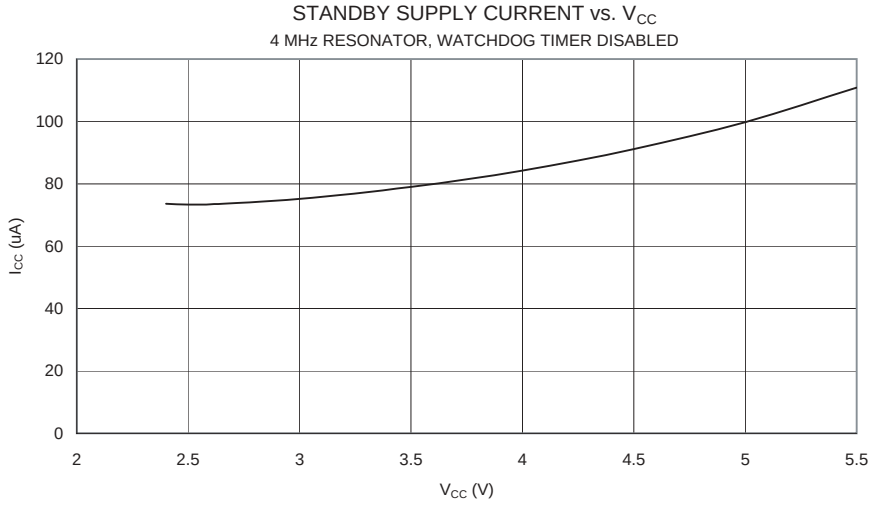

Figure 94. Standby Supply Current vs. V_{CC} (4 MHz XTAL, Watchdog Timer Disabled)

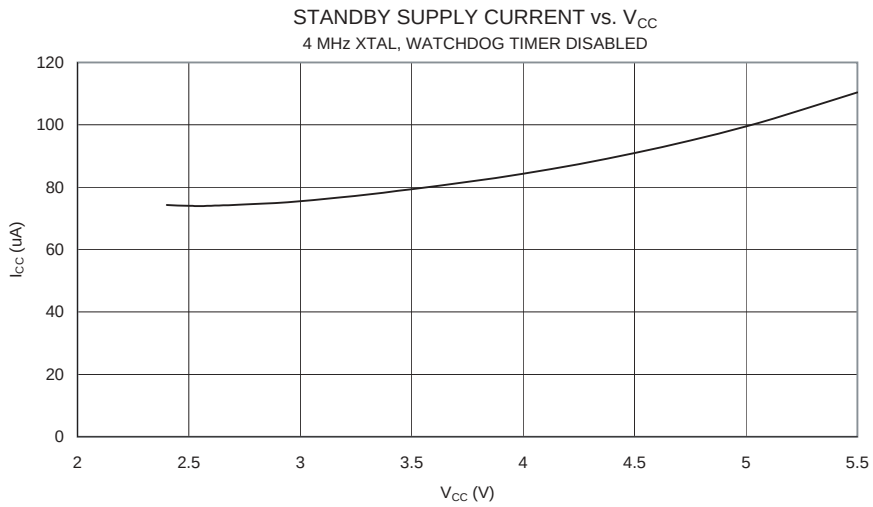

Figure 95. Standby Supply Current vs. V_{CC} (6 MHz Resonator, Watchdog Timer Disabled)

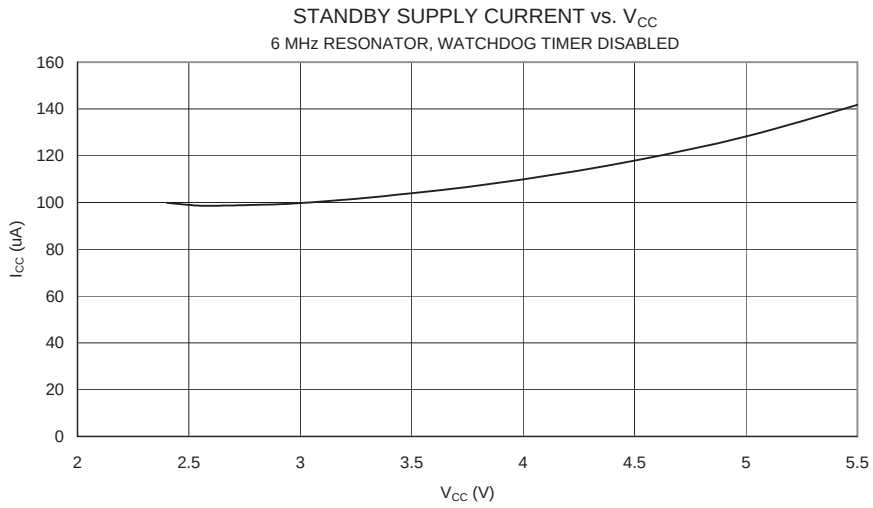

Figure 96. Standby Supply Current vs. V_{CC} (6 MHz XTAL, Watchdog Timer Disabled)

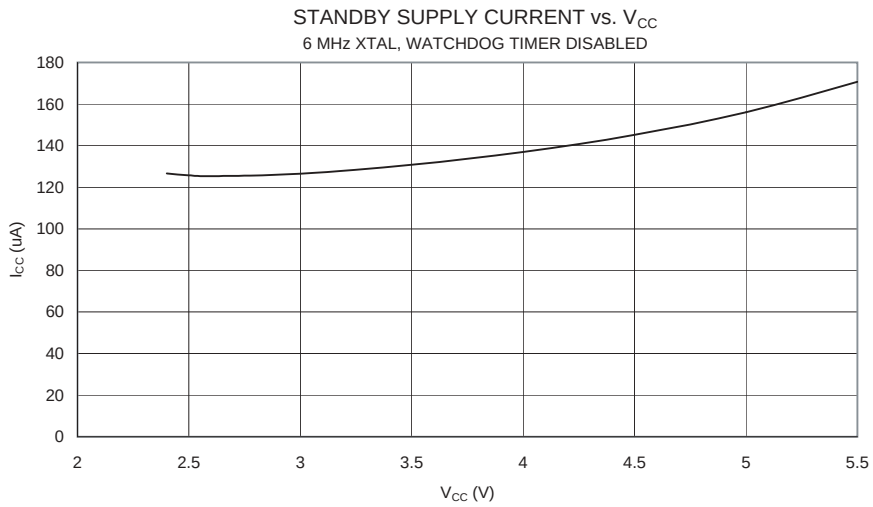

Pin Pull-up

Figure 97. I/O Pin Pull-up Resistor Current vs. Input Voltage (V_{CC} = 5V)

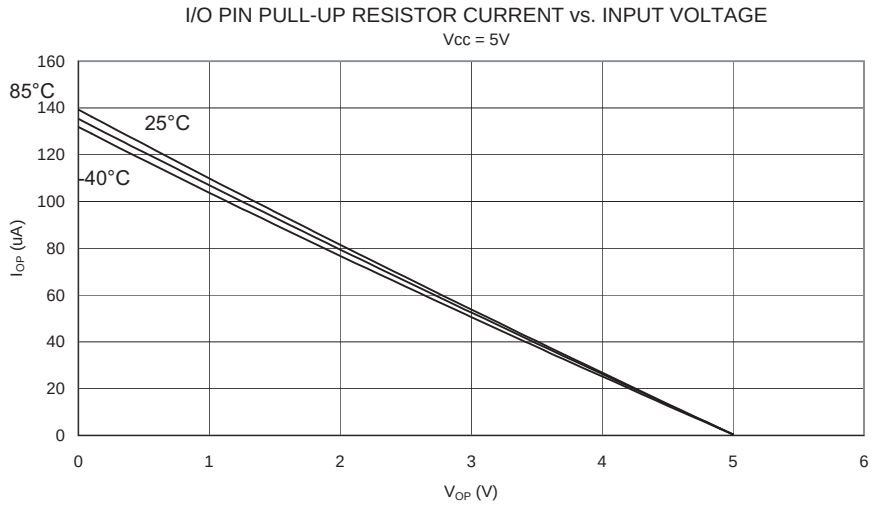

Figure 98. I/O Pin Pull-up Resistor Current vs. Input Voltage (V_{CC} = 2.7V)

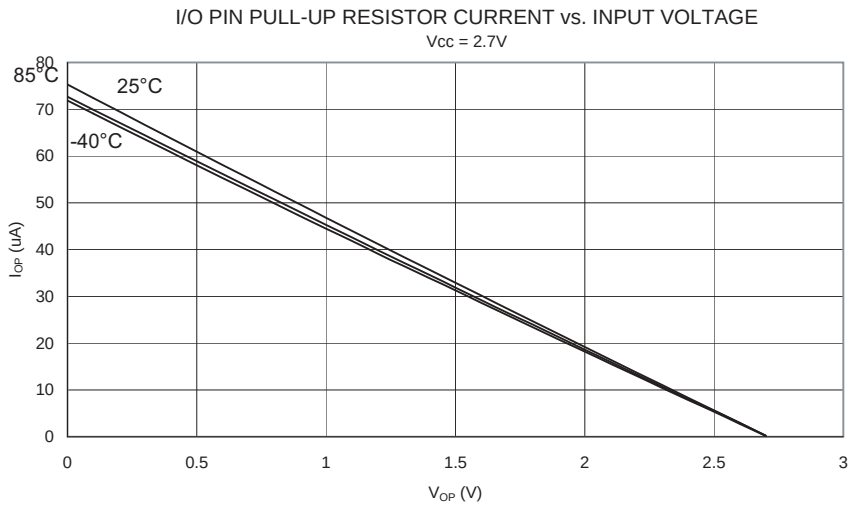

Figure 99. Reset Pull-up Resistor Current vs. Reset Pin Voltage (V_{CC} = 5V)

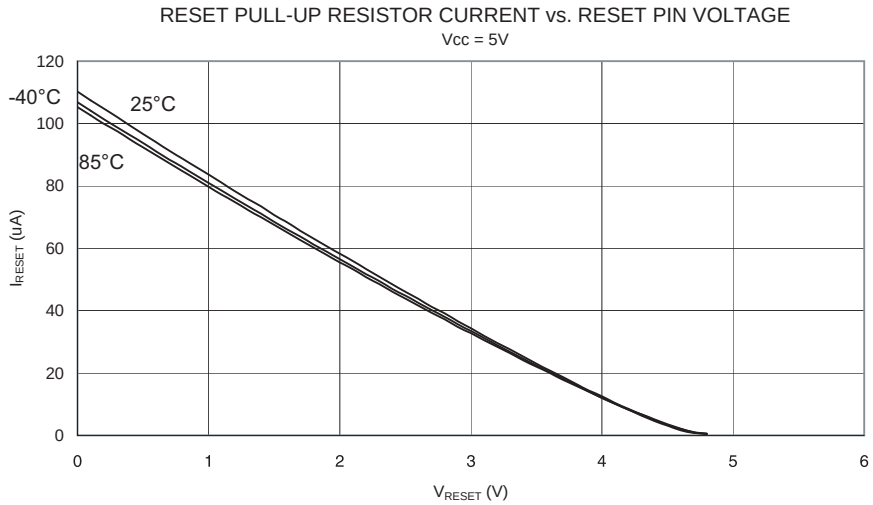

Figure 100. Reset Pull-up Resistor Current vs. Reset Pin Voltage (V_{CC} = 2.7V)

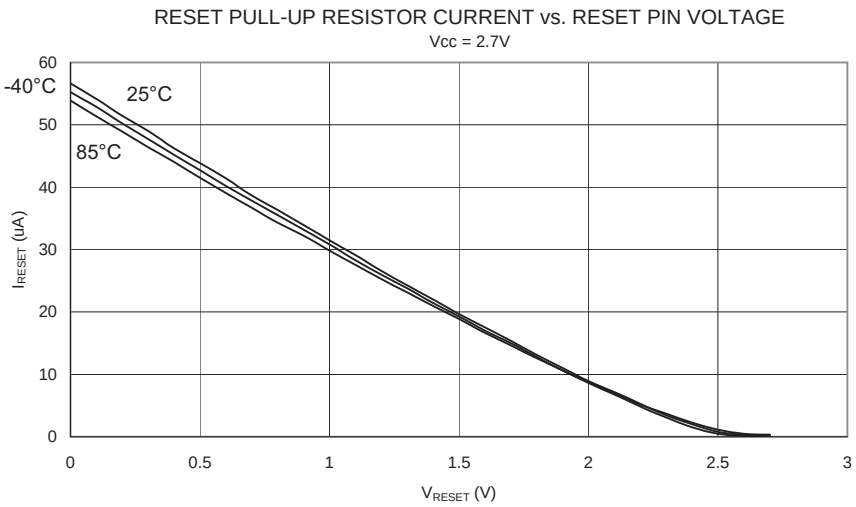

Pin Driver Strength

Figure 101. I/O Pin Source Current vs. Output Voltage (V_{CC} = 5V)

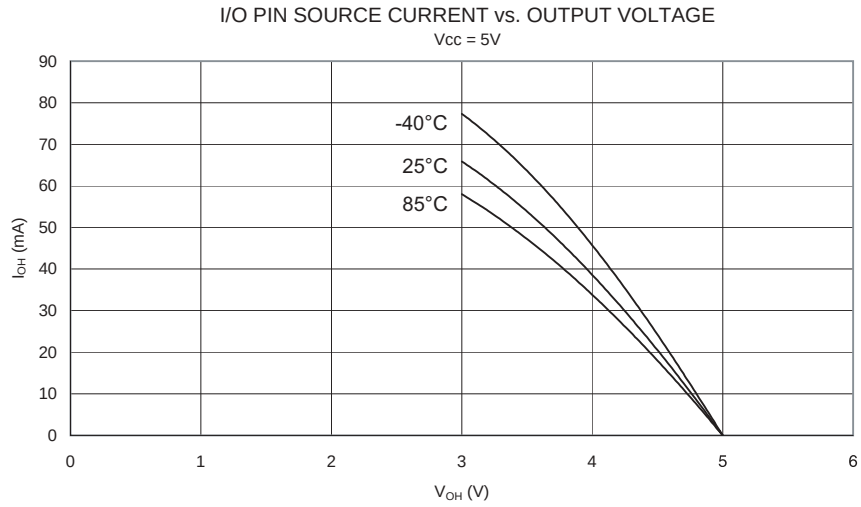

Figure 102. I/O Pin Source Current vs. Output Voltage (V_{CC} = 2.7V)

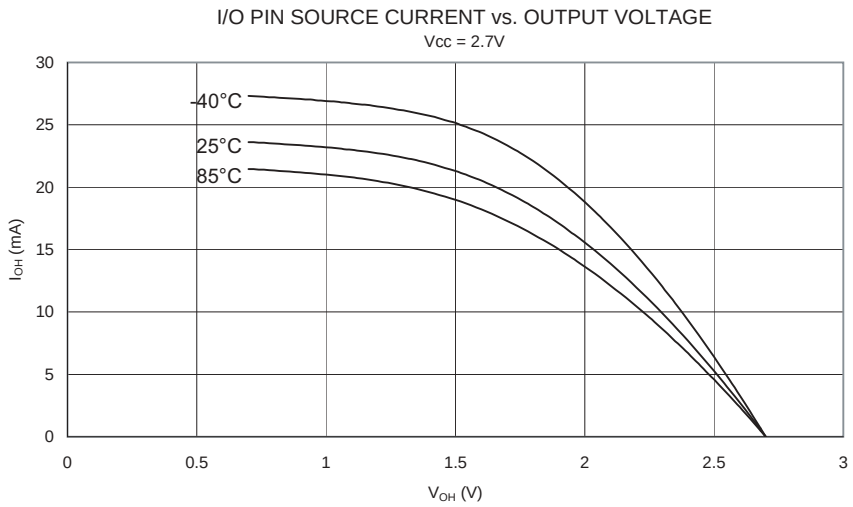

Figure 103. I/O Pin Sink Current vs. Output Voltage (V_{CC} = 5V)

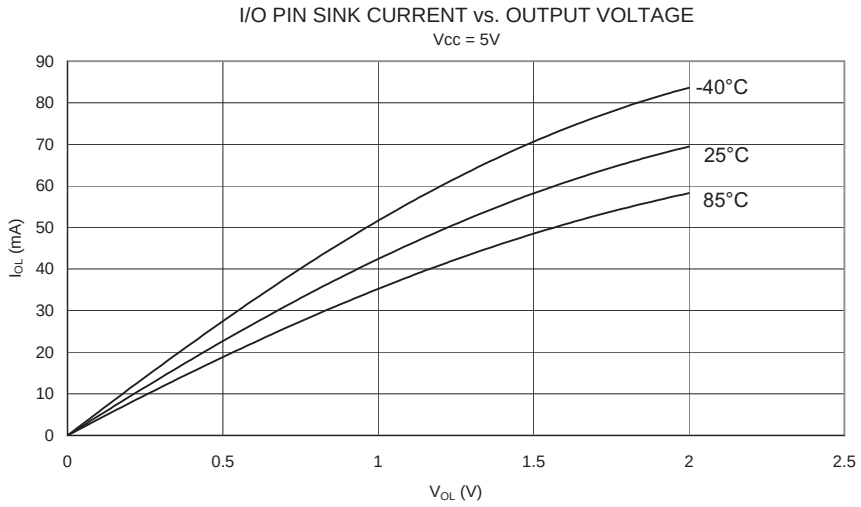

Figure 104. I/O Pin Sink Current vs. Output Voltage (V_{CC} = 2.7V)

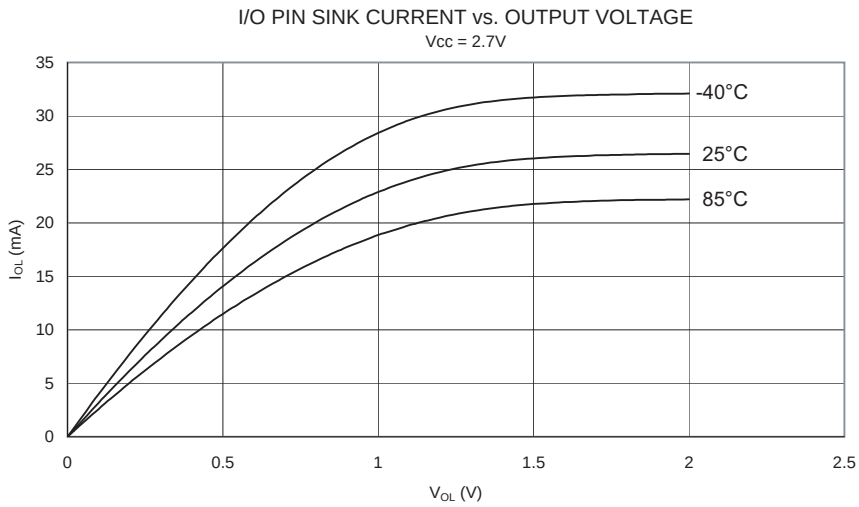

Figure 105. Reset Pin as I/O – Source Current vs. Output Voltage (V_{CC} = 5V)

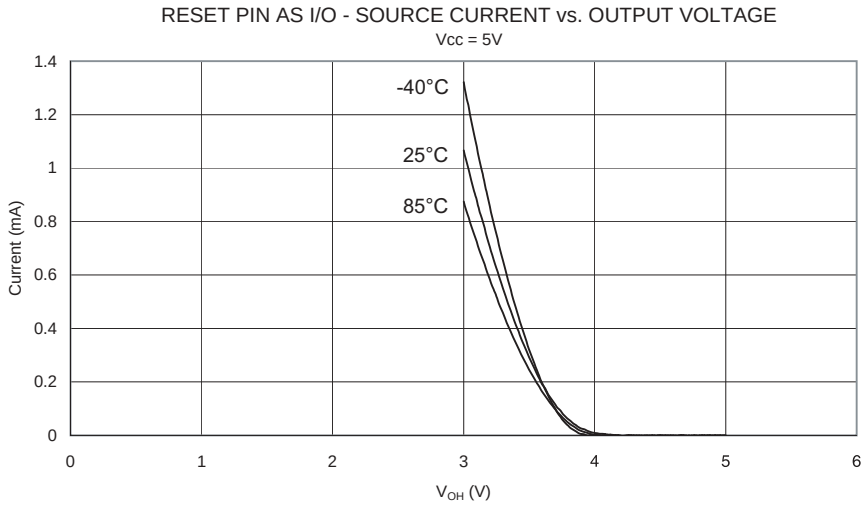

Figure 106. Reset Pin as I/O – Source Current vs. Output Voltage (V_{CC} = 2.7V)

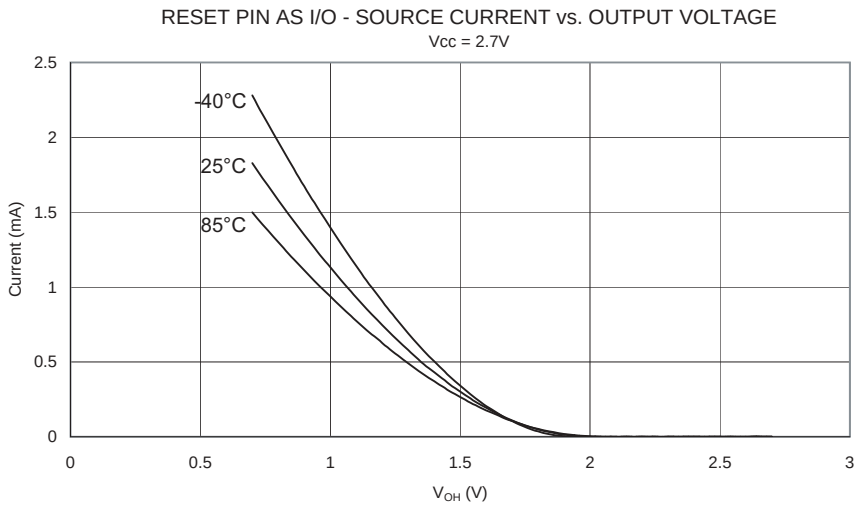

Figure 107. Reset Pin as I/O –Sink Current vs. Output Voltage (V_{CC} = 5V)

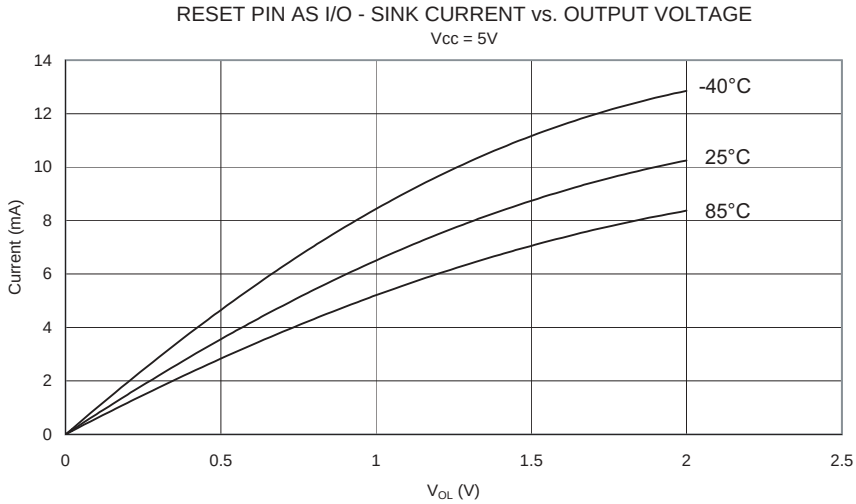

Figure 108. Reset Pin as I/O – Sink Current vs. Output Voltage (V_{CC} = 2.7V)

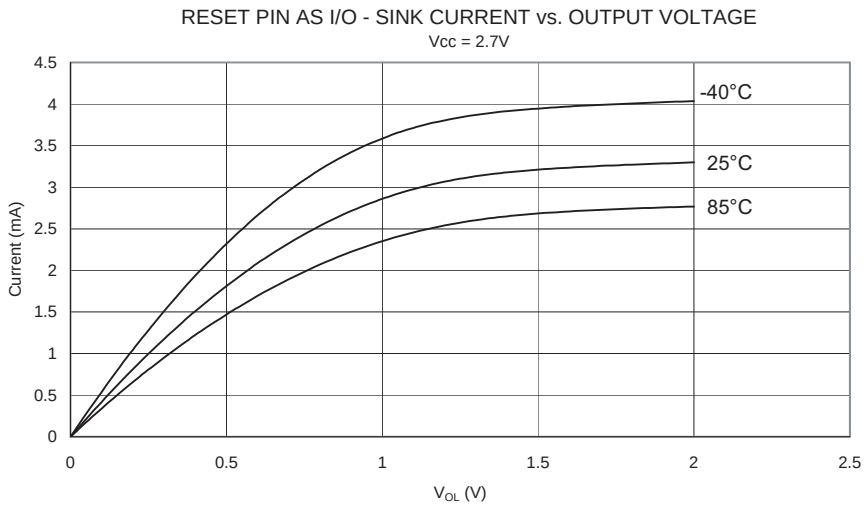

Pin Thresholds and Hysteresis

Figure 109. I/O Pin Input Threshold Voltage vs. V_{CC} (V_{IH}, I/O Pin Read as “1”)

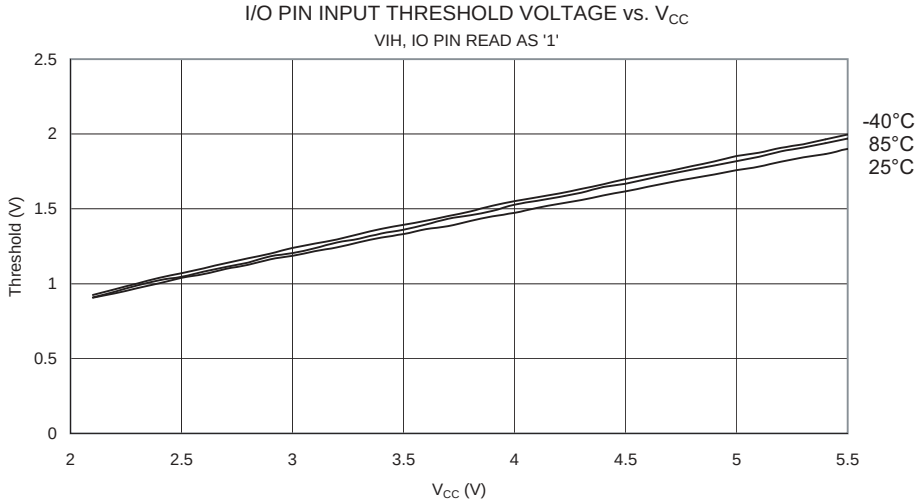

Figure 110. I/O Pin Input Threshold Voltage vs. V_{CC} (V_{IL}, I/O Pin Read as “0”)

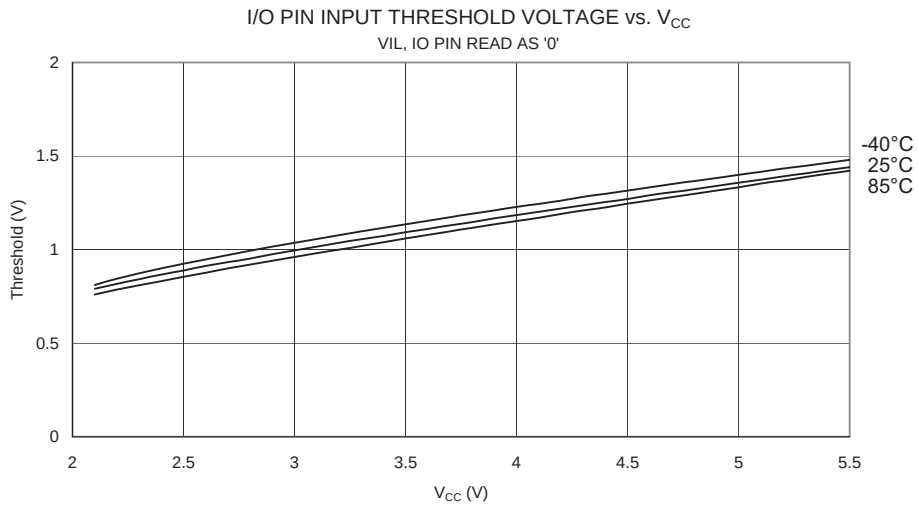

Figure 111. I/O Pin Input Hysteresis vs. V_{CC}

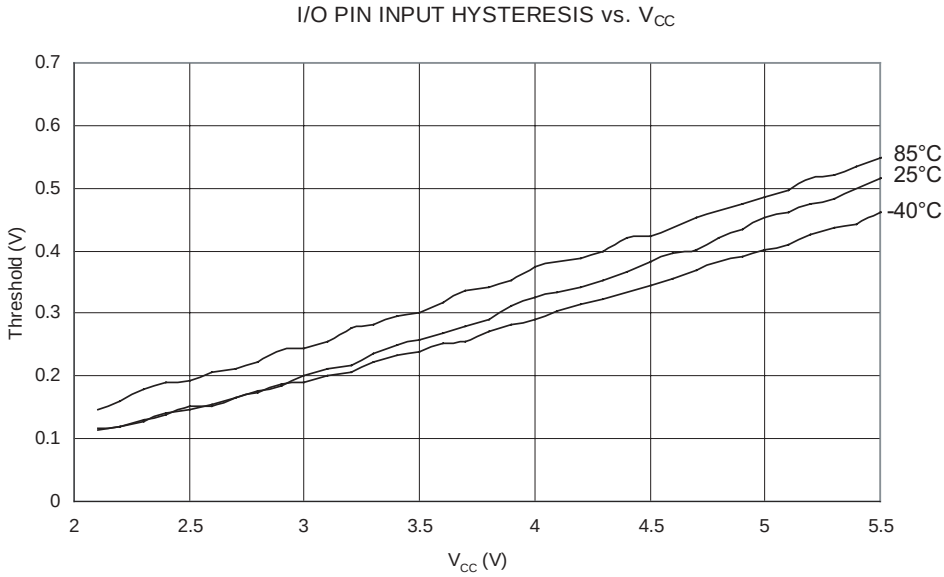

Figure 112. Reset Pin as I/O – Input Threshold Voltage vs. V_{CC} (V_{IH}, Reset Pin Read as “1”)

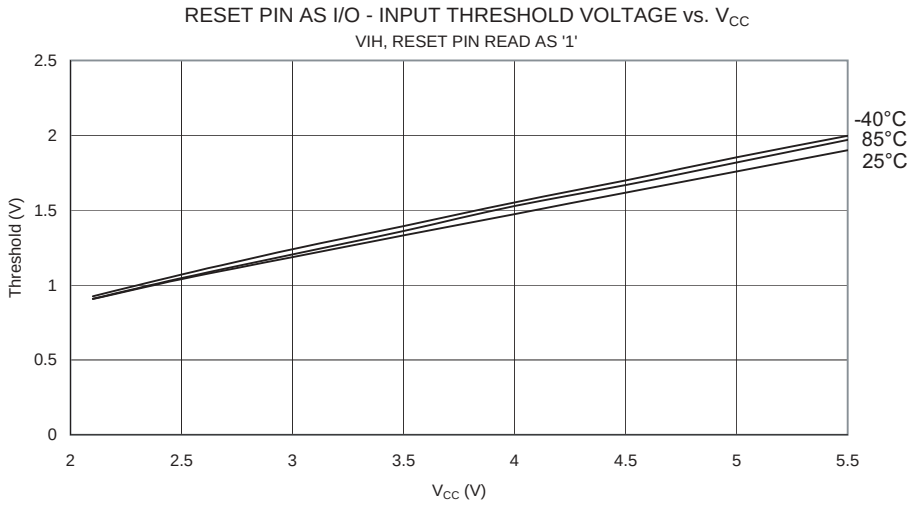

Figure 113. Reset Pin as I/O – Input Threshold Voltage vs. V_{CC} (V_{IL}, Reset Pin Read as “0”)

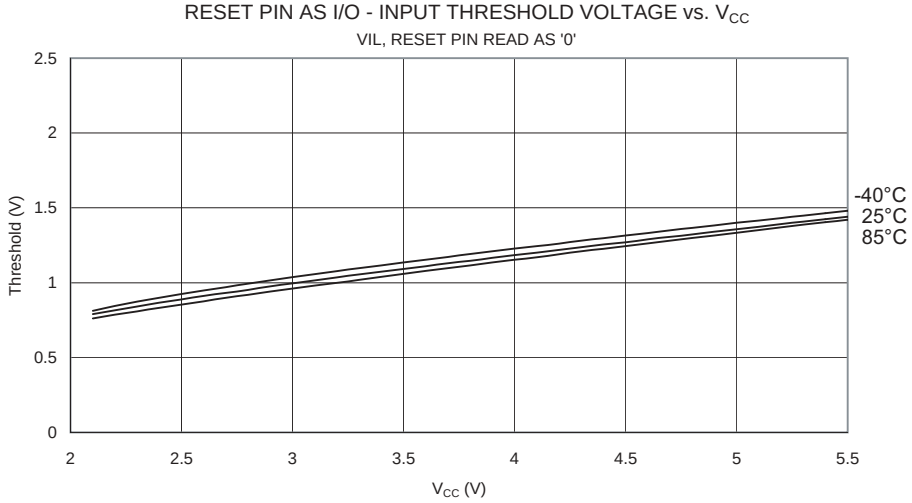

Figure 114. Reset Pin as I/O – Pin Hysteresis vs. V_{CC}

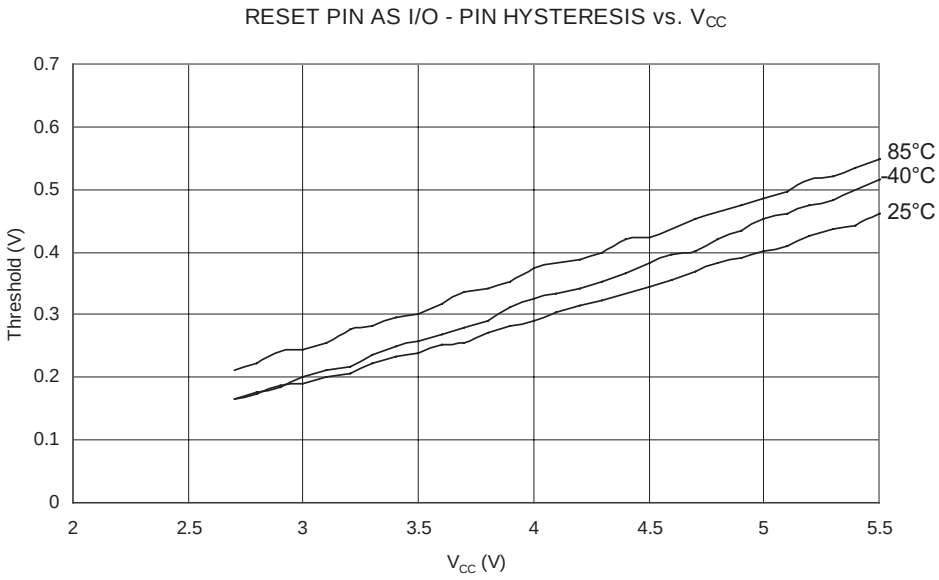

Figure 115. Reset Input Threshold Voltage vs. V_{CC} (V_{IH}, Reset Pin Read as “1”)

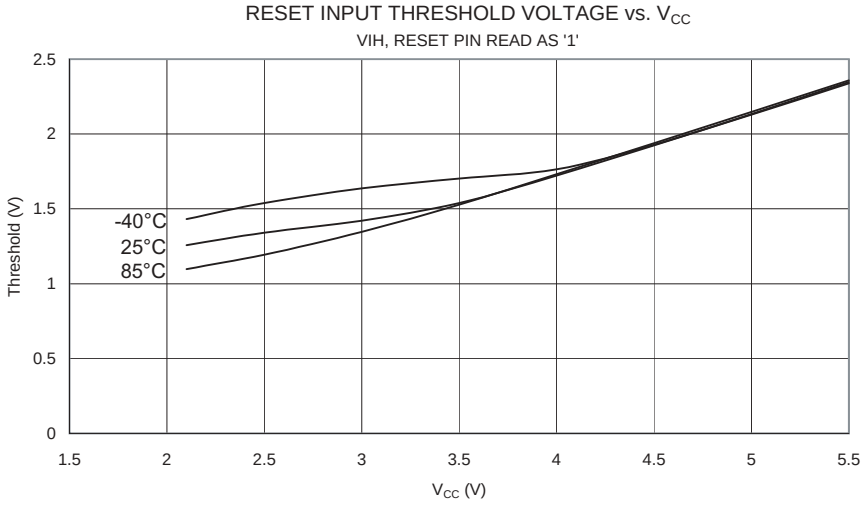

Figure 116. Reset Input Threshold Voltage vs. V_{CC} (V_{IL}, Reset Pin Read as “0”)

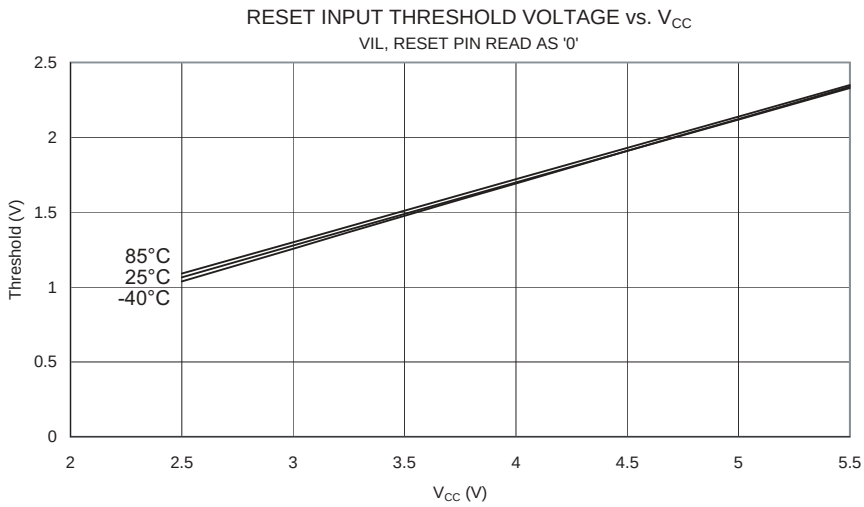

Figure 117. Reset Input Pin Hysteresis vs. V_{CC}

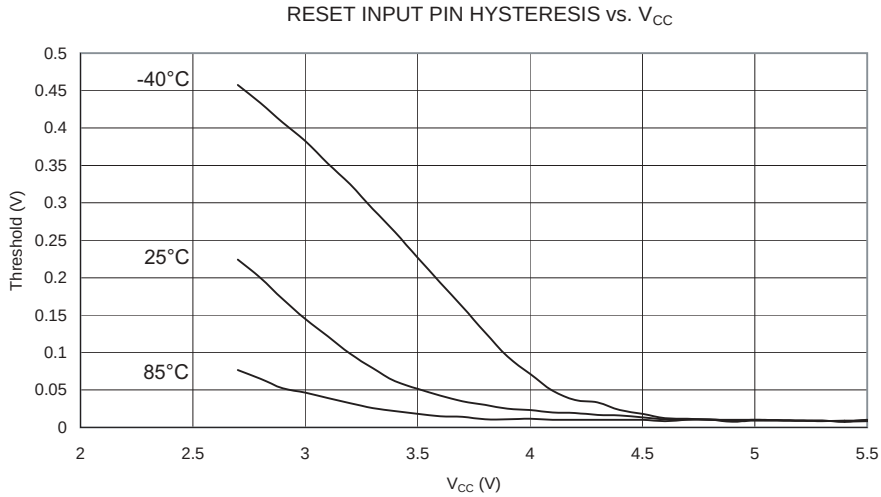

BOD Thresholds and Analog Comparator Offset

Figure 118. BOD Thresholds vs. Temperature (BOD Level is 4.0V)

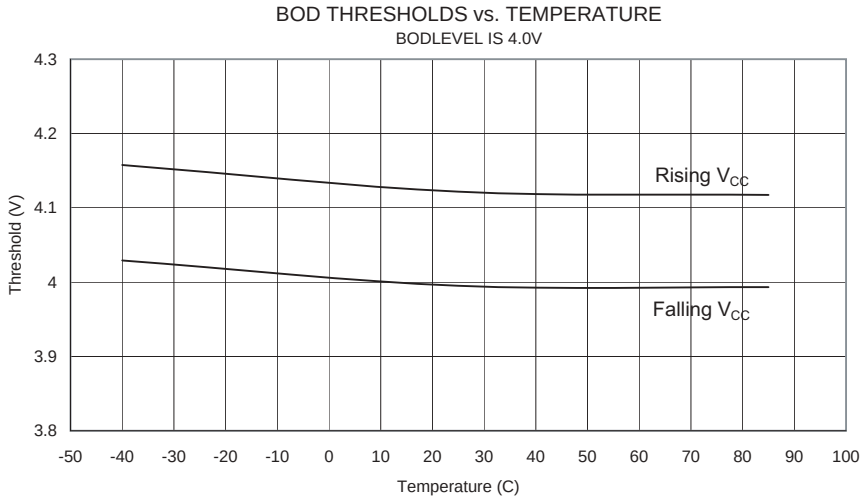

Figure 119. BOD Thresholds vs. Temperature (BOD Level is 2.7V)

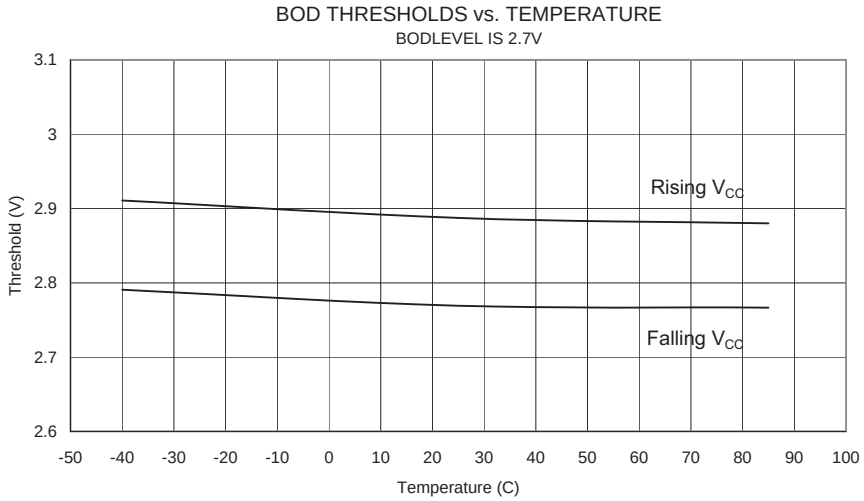

Figure 120. Bandgap Voltage vs. V_{CC}

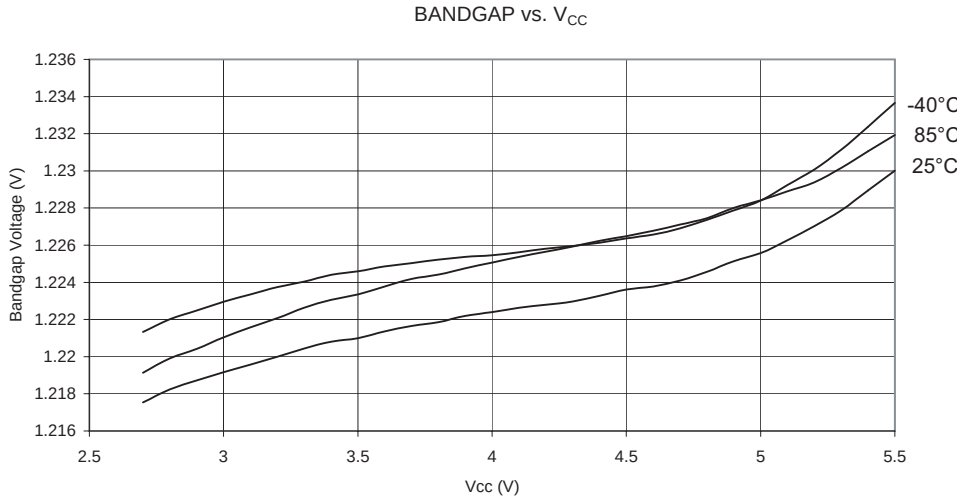

Figure 121. Analog Comparator Offset Voltage vs. Common Mode Voltage (V_{CC}= 5.0V)

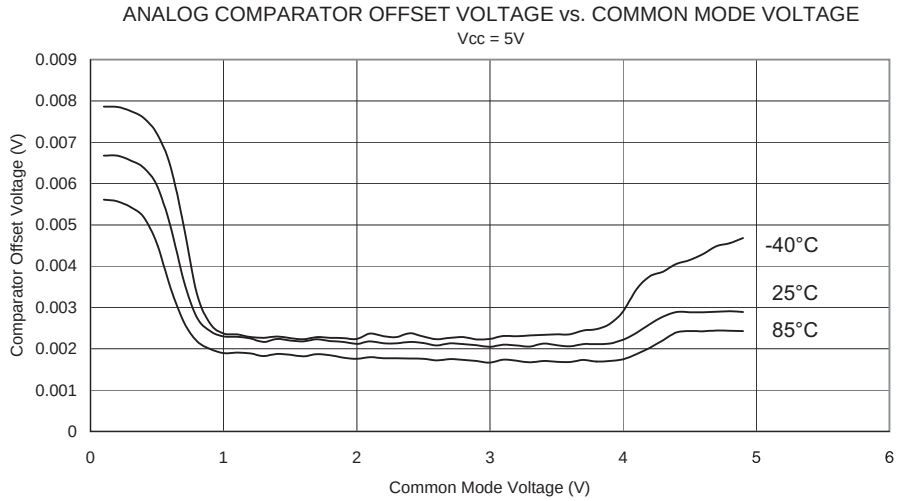

Figure 122. Analog Comparator Offset Voltage vs. Common Mode Voltage (V_{CC}= 2.7V)

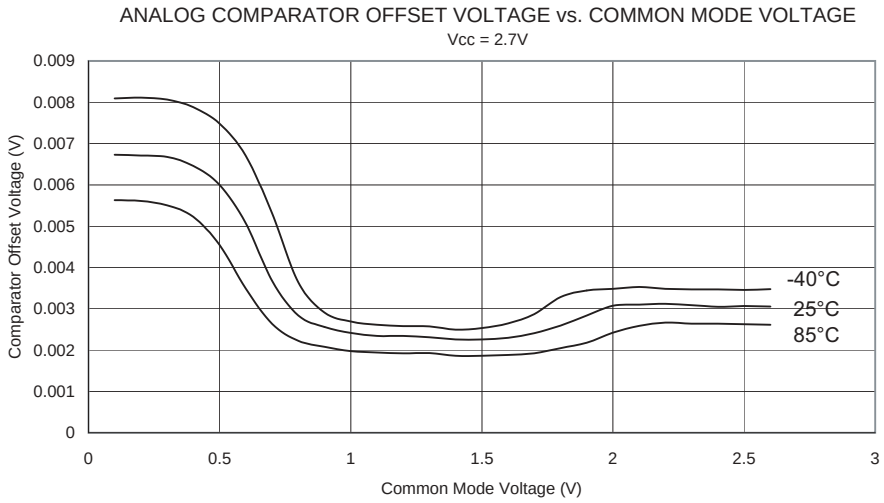

Internal Oscillator Speed

Figure 123. Watchdog Oscillator Frequency vs. V_{CC}

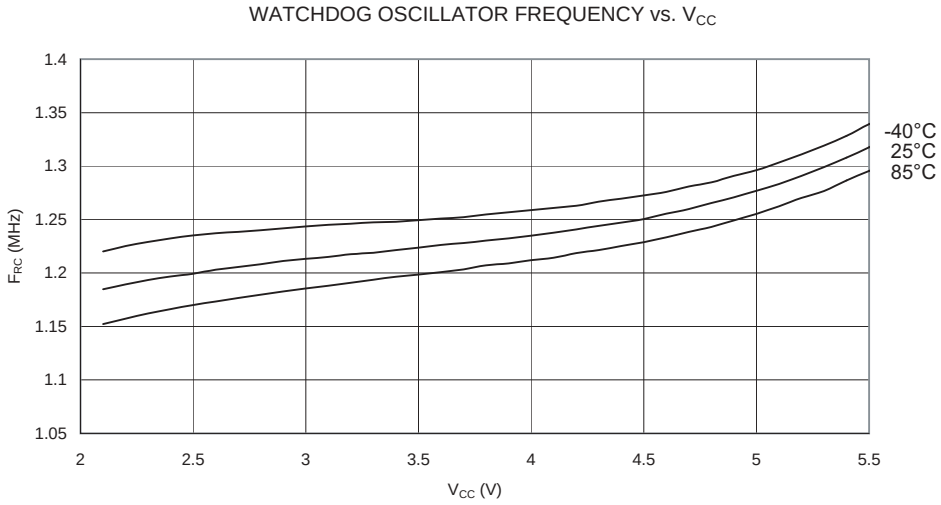

Figure 124. Calibrated 8 MHz RC Oscillator Frequency vs. Temperature

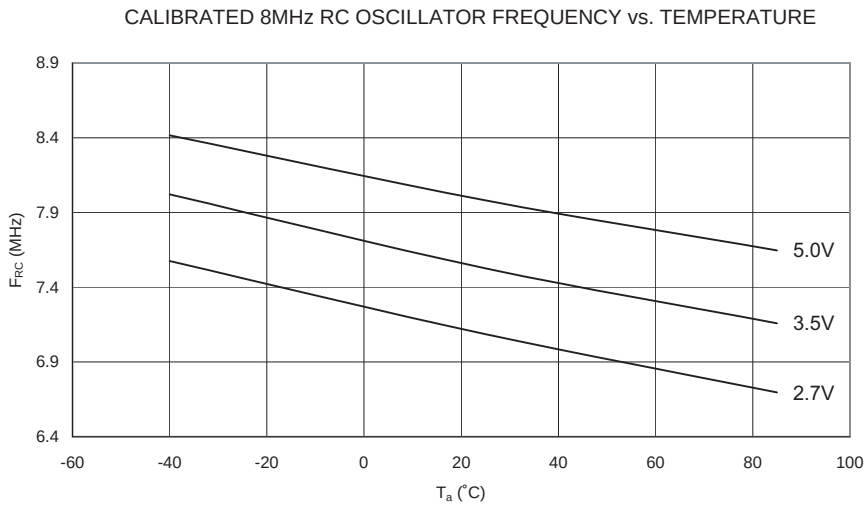

Figure 125. Calibrated 8 MHz RC Oscillator Frequency vs. V_{CC}

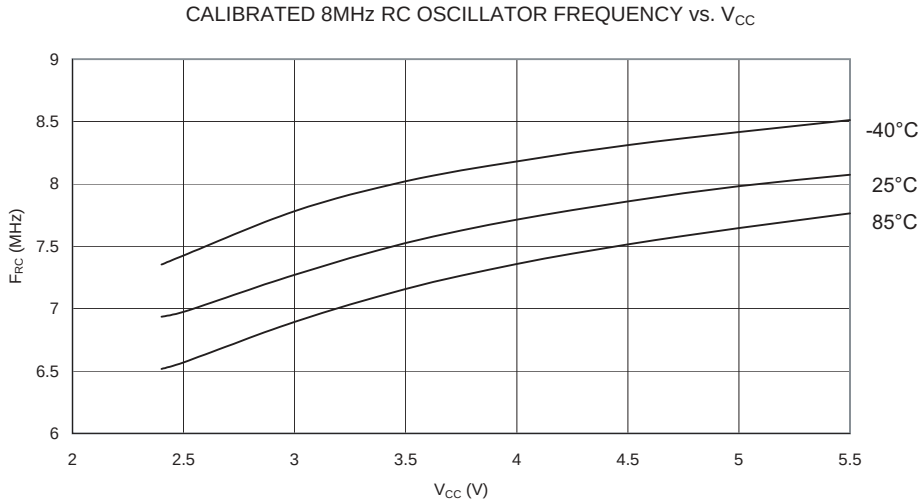

Figure 126. Calibrated 8 MHz RC Oscillator Frequency vs. Osccal Value

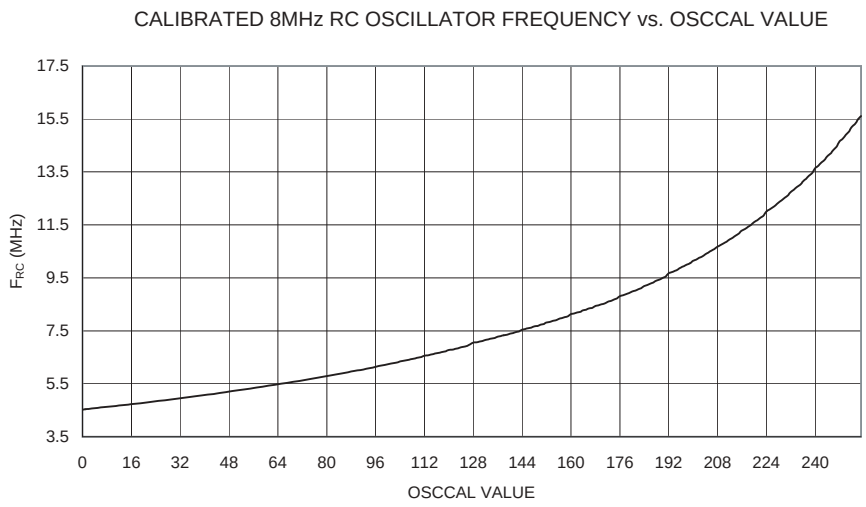

Figure 127. Calibrated 4 MHz RC Oscillator Frequency vs. Temperature

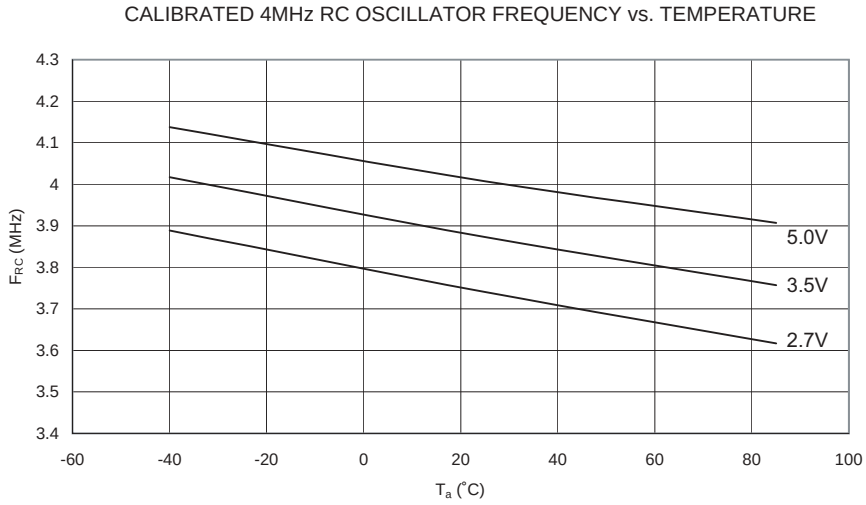

Figure 128. Calibrated 4 MHz RC Oscillator Frequency vs. V_{CC}

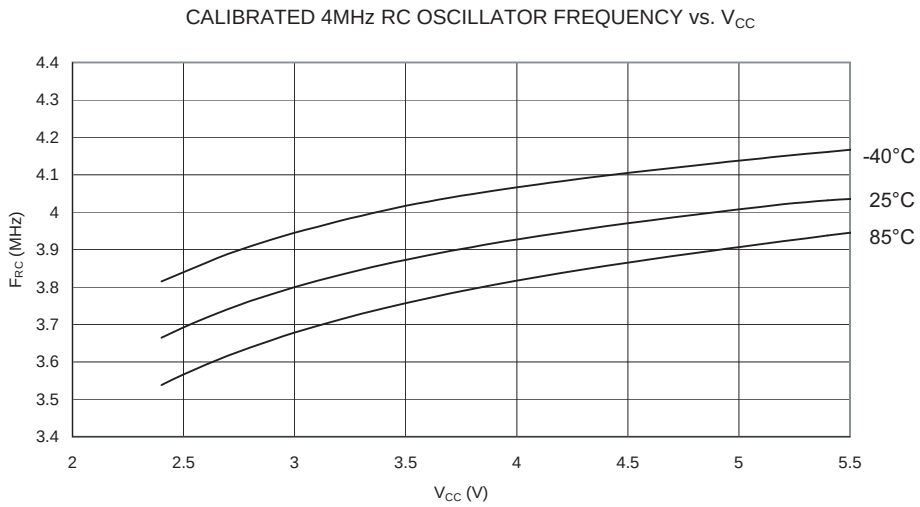

Figure 129. Calibrated 4 MHz RC Oscillator Frequency vs. Osccal Value

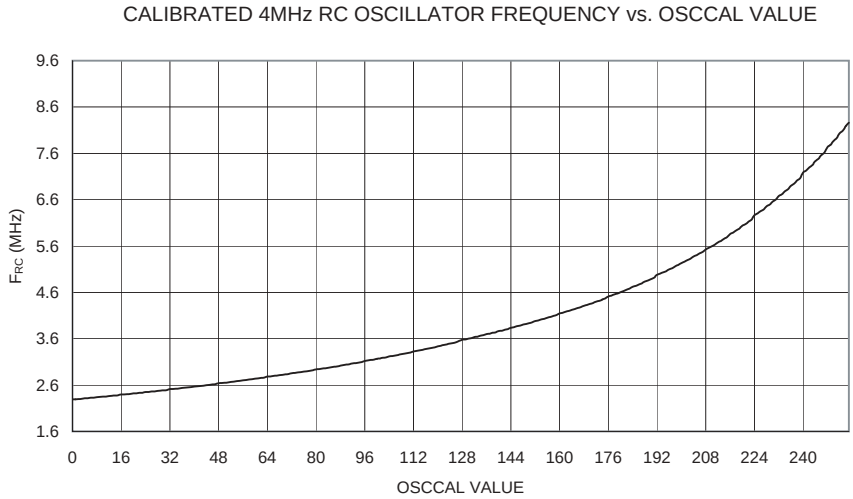

Figure 130. Calibrated 2 MHz RC Oscillator Frequency vs. Temperature

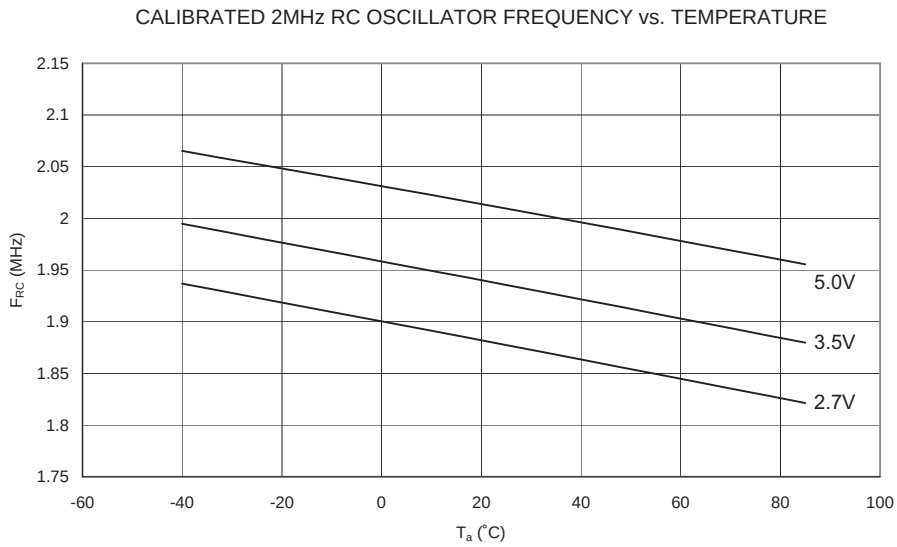

Figure 131. Calibrated 2 MHz RC Oscillator Frequency vs. V_{CC}

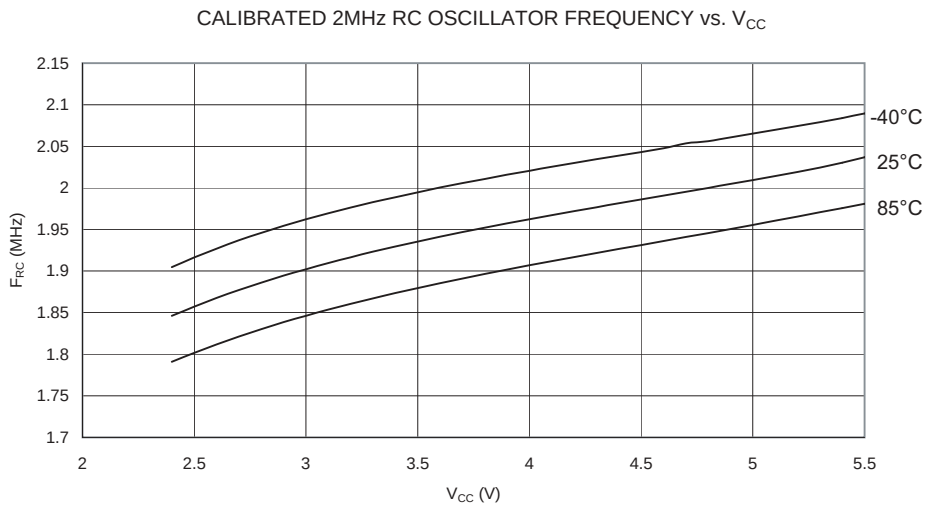

Figure 132. Calibrated 2 MHz RC Oscillator Frequency vs. Osccal Value

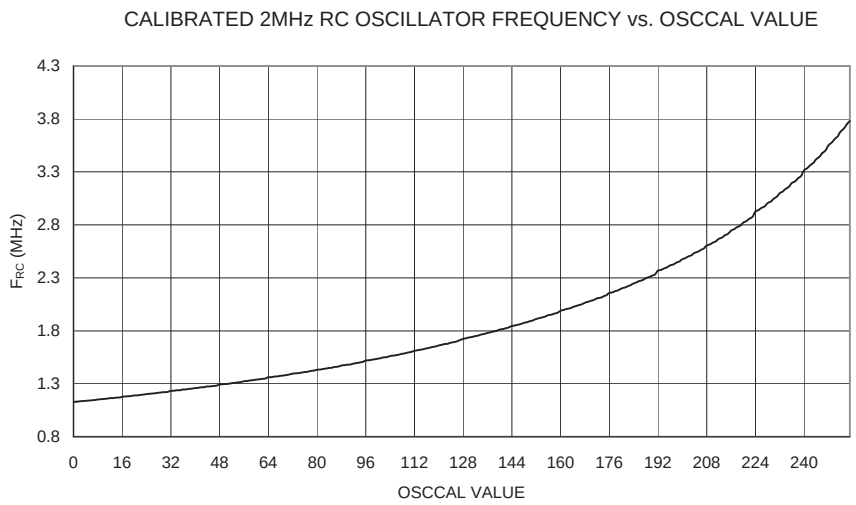

Figure 133. Calibrated 1 MHz RC Oscillator Frequency vs. Temperature

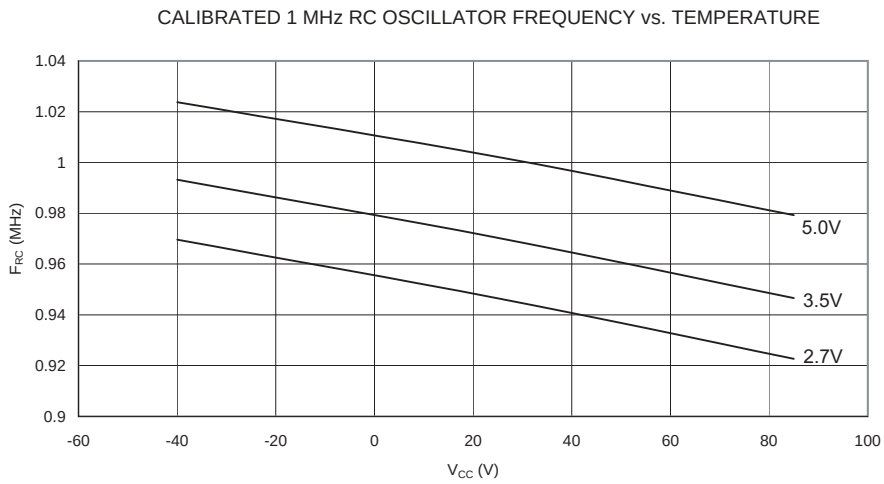

Figure 134. Calibrated 1 MHz RC Oscillator Frequency vs. V_{CC}

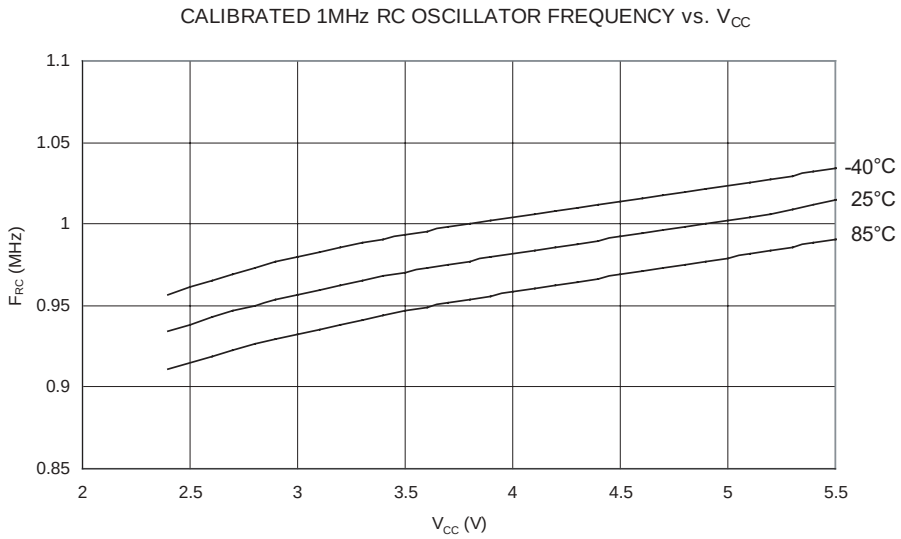

Figure 135. Calibrated 1 MHz RC Oscillator Frequency vs. Osccal Value

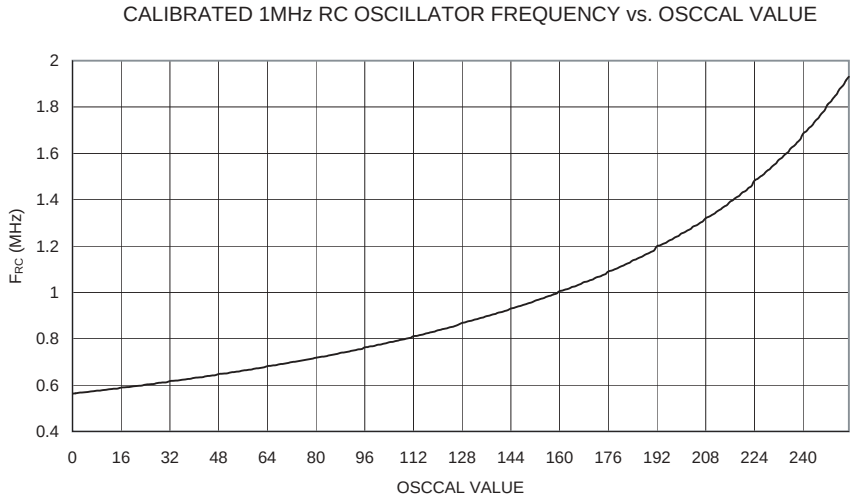

Current Consumption of Peripheral Units

Figure 136. Brown-out Detector Current vs. V_{CC}

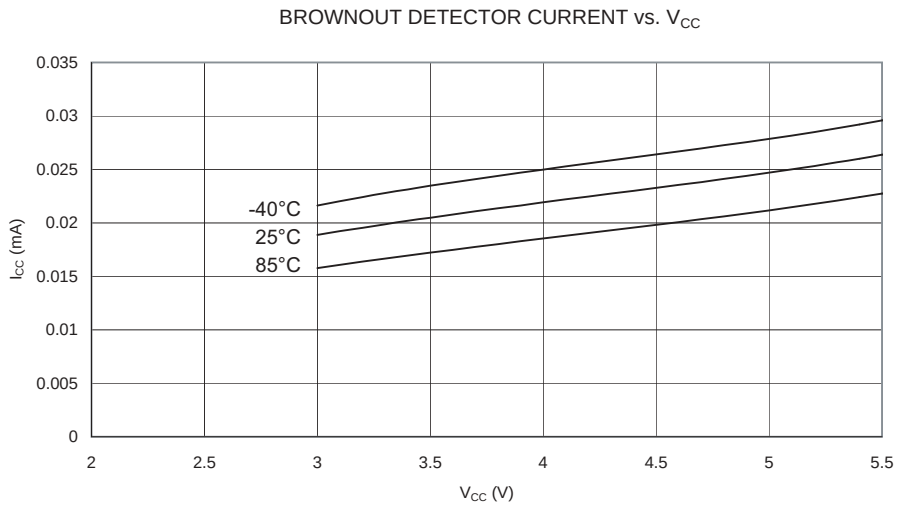

Figure 137. ADC Current vs. V_{CC} (AREF = AV_{CC})

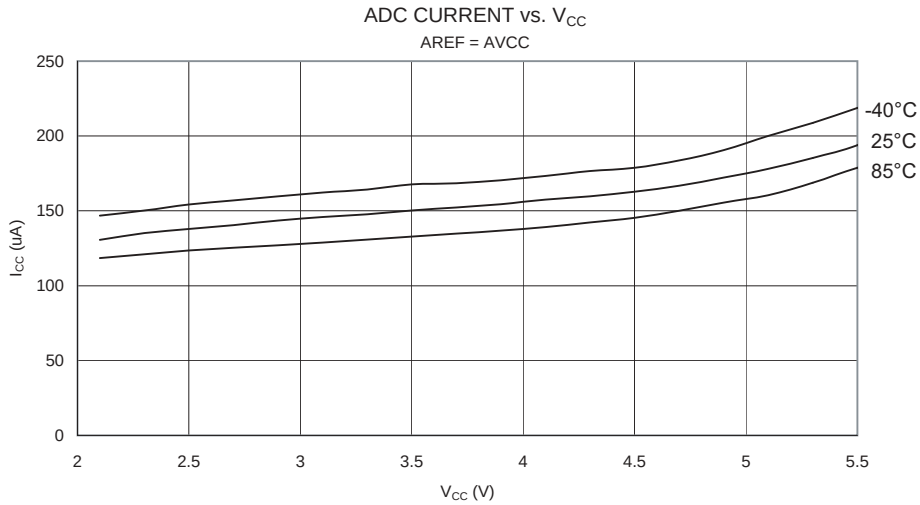

Figure 138. AREF External Reference Current vs. V_{CC}

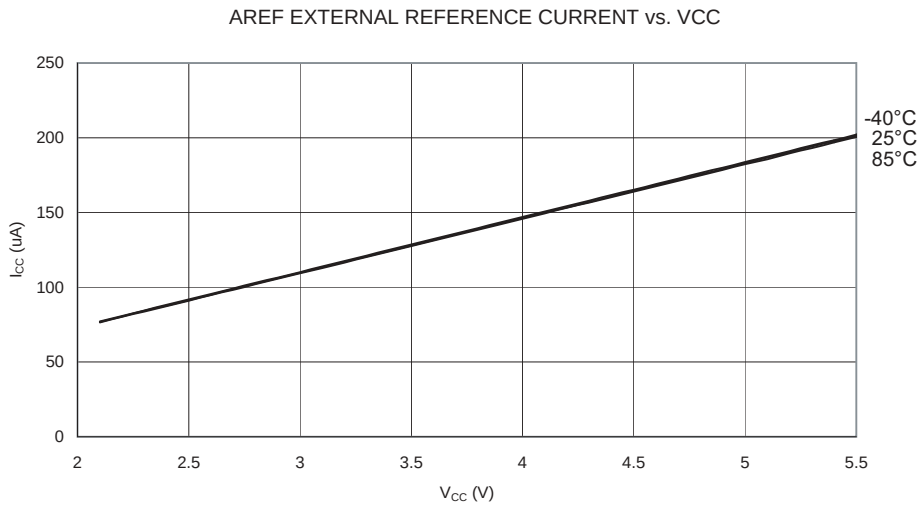

Figure 139. Analog Comparator Current vs. V_{CC}

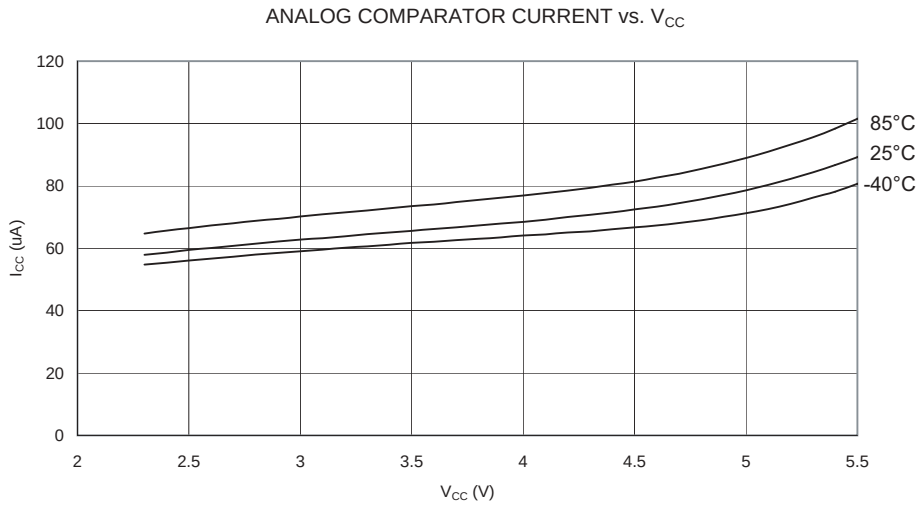

Figure 140. Programming Current vs. V_{CC}

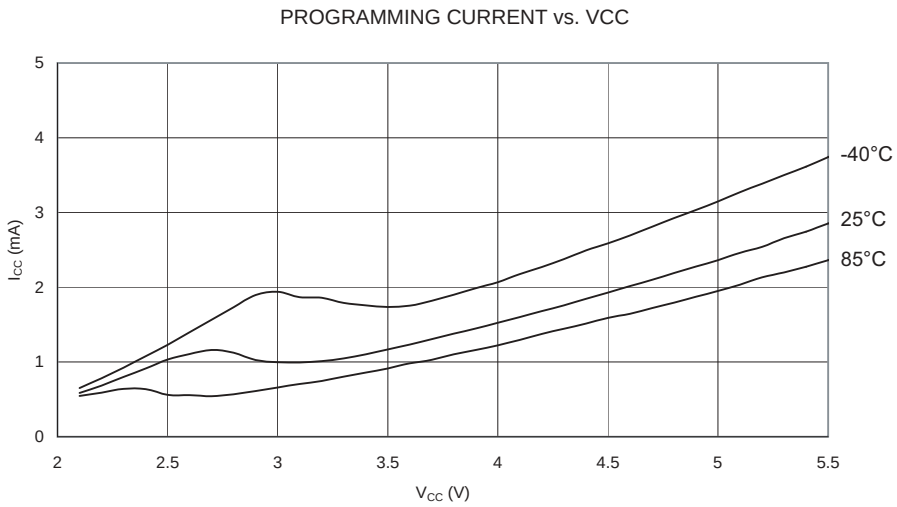

Current Consumption in Reset and Reset Pulsewidth

Figure 141. Reset Supply Current vs. V_{CC}
(0.1 - 1.0 MHz, Excluding Current Through The Reset Pull-up)

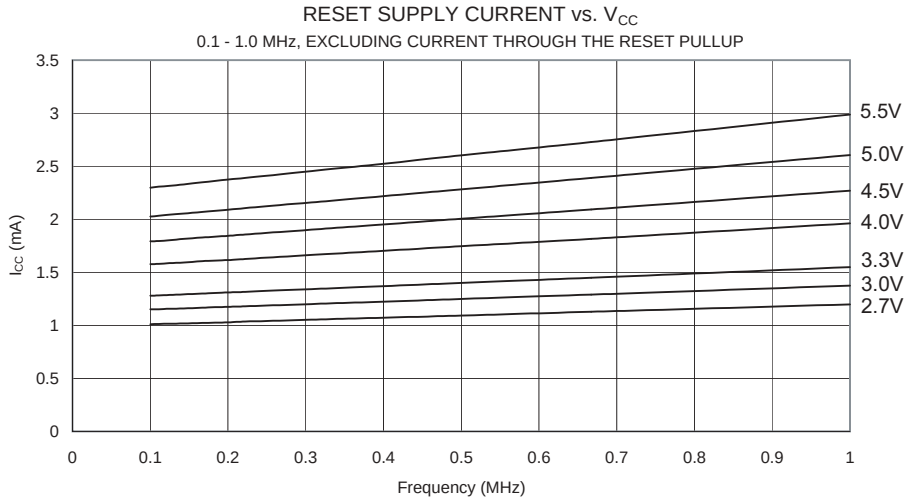

Figure 142. Reset Supply Current vs. V_{CC}
(1 - 20 MHz, Excluding Current Through The Reset Pull-up)

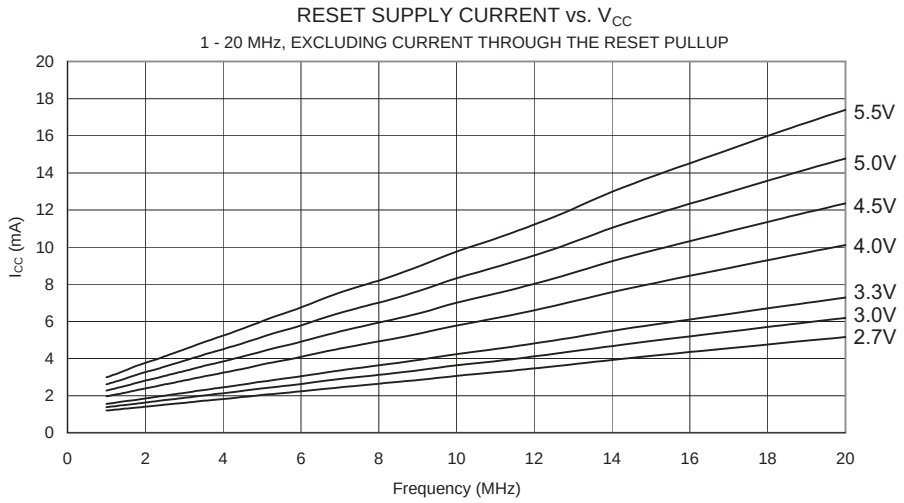

Figure 143. Reset Pulsewidth vs. V_{CC}

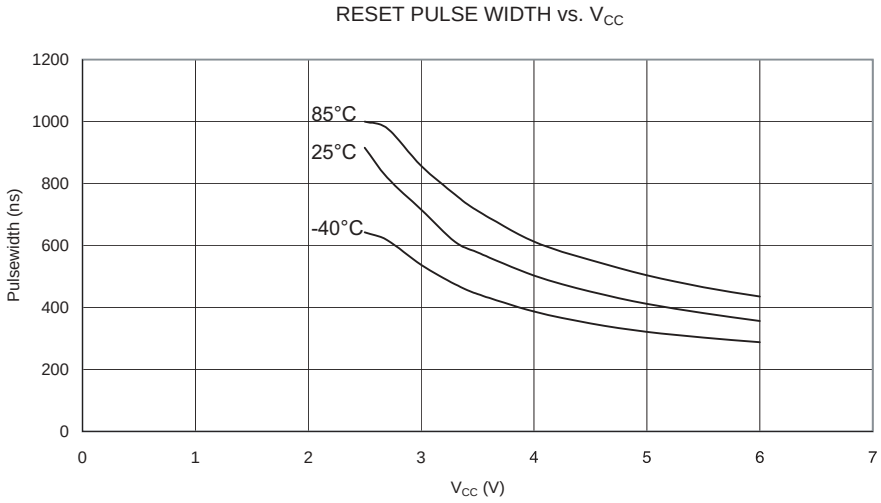

Register Summary

Address	Name	Bit 7	Bit 6	Bit 5	Bit 4	Bit 3	Bit 2	Bit 1	Bit 0	Page
$3F ($5F)	SREG	I	T	H	S	V	N	Z	C	18
$3E ($5E)	Reserved									
$3D ($5D)	SP	SP7	SP6	SP5	SP4	SP3	SP2	SP1	SP0	19
$3C ($5C)	Reserved									
$3B ($5B)	GIMSK	-	INT0	PCIE1	PCIE0	-	-	-	-	34
$3A ($5A)	GIFR	-	INTF0	PCIF	-	-	-	-	-	35
$39 ($59)	TIMSK	-	OCIE1A	OCIE1B	-	-	TOIE1	TOIE0	-	36
$38 ($58)	TIFR	-	OCF1A	OCF1B	-	-	TOV1	TOV0	-	37
$37 ($57)	Reserved									
$36 ($56)	Reserved									
$35 ($55)	MCUCR	-	PUD	SE	SM1	SM0	-	ISC01	ISC00	39
$34 ($54)	MCUSR	-	-	-	-	WDRF	BORF	EXTRF	PORF	33
$33 ($53)	TCCR0	-	-	-	-	PSR0	CS02	CS01	CS00	46
$32 ($52)	TCNT0	Timer/Counter0 (8-Bit)								47
$31 ($51)	OSCCAL	Oscillator Calibration Register								31
$30 ($50)	TCCR1A	COM1A1	COM1A0	COM1B1	COM1B0	FOC1A	FOC1B	PWM1A	PWM1B	50
$2F ($4F)	TCCR1B	CTC1	PSR1	-	-	CS13	CS12	CS11	CS10	51
$2E ($4E)	TCNT1	Timer/Counter1 (8-Bit)								52
$2D ($4D)	OCR1A	Timer/Counter1 Output Compare Register A (8-Bit)								52
$2C ($4C)	OCR1B	Timer/Counter1 Output Compare Register B (8-Bit)								53
$2B ($4B)	OCR1C	Timer/Counter1 Output Compare Register C (8-Bit)								53
$2A ($4A)	Reserved									
$29 ($49)	PLLCSR	-	-	-	-	-	PCKE	PLLE	PLOCK	
$28 ($48)	Reserved									
$27 ($47)	Reserved									
$26 ($46)	Reserved									
$25 ($45)	Reserved									
$24 ($44)	Reserved									
$23 ($43)	Reserved									
$22 ($42)	Reserved									
$21 ($41)	WDTCR	-	-	-	WDCE	WDE	WDP2	WDP1	WDP0	58
$20 ($40)	Reserved									
$1F ($3F)	Reserved									
$1E ($3E)	EEAR	-	EEAR6	EEAR5	EEAR4	EEAR3	EEAR2	EEAR1	EEAR0	60
$1D ($3D)	EEDR	EEPROM Data Register (8-Bit)								60
$1C ($3C)	EECR	-	-	-	-	EERIE	EEMWE	EEWE	EERE	60
$1B ($3B)	PORTA	PORTA7	PORTA6	PORTA5	PORTA4	PORTA3	PORTA2	PORTA1	PORTA0	
$1A ($3A)	DDRA	DDA7	DDA6	DDA5	DDA4	DDA3	DDA2	DDA1	DDA0	
$19 ($39)	PINA	PINA7	PINA6	PINA5	PINA4	PINA3	PINA2	PINA1	PINA0	
$18 ($38)	PORTB	PORTB7	PORTB6	PORTB5	PORTB4	PORTB3	PORTB2	PORTB1	PORTB0	
$17 ($37)	DDRB	DDB7	DDB6	DDB5	DDB4	DDB3	DDB2	DDB1	DDB0	
$16 ($36)	PINB	PINB7	PINB6	PINB5	PINB4	PINB3	PINB2	PINB1	PINB0	
$15 ($35)	Reserved									
$14 ($34)	Reserved									
$13 ($33)	Reserved									
$12 ($32)	Reserved									
$11 ($31)	Reserved									
$10 ($30)	Reserved									
$0F ($2F)	USIDR	Universal Serial Interface Data Register (8-Bit)								64
$0E ($2E)	USISR	USISIF	USIOIF	USIPF	USIDC	USICNT3	USICNT2	USICNT1	USICNT0	64
$0D ($2D)	USICR	USISIE	USIOIE	USIWM1	USIWM0	USICS1	USICS0	USICLK	USITC	65
$0C ($2C)	Reserved									
$0B ($2)B	Reserved									
$0A ($2A)	Reserved									
$09 ($29)	Reserved									
$08 ($28)	ACSR	ACD	ACBG	ACO	ACI	ACIE	ACME	ACIS1	ACIS0	74
$07 ($27)	ADMUX	REFS1	REFS0	ADLAR	MUX4	MUX3	MUX2	MUX1	MUX0	84
$06 ($26)	ADCSR	ADEN	ADSC	ADFR	ADIF	ADIE	ADPS2	ADPS1	ADPS0	86
$05 ($25)	ADCH	ADC Data Register High Byte								87
$04 ($24)	ADCL	ADC Data Register Low Byte								87
…	Reserved									
$00 ($20)	Reserved									

Instruction Set Summary

Mnemonic	Operands	Description	Operation	Flags	# Clocks
ARITHMETIC AND LOGIC INSTRUCTIONS					
ADD	Rd, Rr	Add Two Registers	Rd ← Rd + Rr	Z,C,N,V,H	1
ADC	Rd, Rr	Add with Carry Two Registers	Rd ← Rd + Rr + C	Z,C,N,V,H	1
ADIW	Rdl, K	Add Immediate to Word	Rdh:Rdl ← Rdh:Rdl + K	Z,C,N,V,S	2
SUB	Rd, Rr	Subtract Two Registers	Rd ← Rd - Rr	Z,C,N,V,H	1
SUBI	Rd, K	Subtract Constant from Register	Rd ← Rd - K	Z,C,N,V,H	1
SBC	Rd, Rr	Subtract with Carry Two Registers	Rd ← Rd - Rr - C	Z,C,N,V,H	1
SBCI	Rd, K	Subtract with Carry Constant from Reg.	Rd ← Rd - K - C	Z,C,N,V,H	1
SBIW	Rdl, K	Subtract Immediate from Word	Rdh:Rdl ← Rdh:Rdl - K	Z,C,N,V,S	2
AND	Rd, Rr	Logical AND Registers	Rd ← Rd • Rr	Z,N,V	1
ANDI	Rd, K	Logical AND Register and Constant	Rd ← Rd • K	Z,N,V	1
OR	Rd, Rr	Logical OR Registers	Rd ← Rd v Rr	Z,N,V	1
ORI	Rd, K	Logical OR Register and Constant	Rd ← Rd v K	Z,N,V	1
EOR	Rd, Rr	Exclusive OR Registers	Rd ← Rd ⊕ Rr	Z,N,V	1
COM	Rd	One's Complement	Rd ← $FF - Rd	Z,C,N,V	1
NEG	Rd	Two's Complement	Rd ← $00 - Rd	Z,C,N,V,H	1
SBR	Rd, K	Set Bit(s) in Register	Rd ← Rd v K	Z,N,V	1
CBR	Rd, K	Clear Bit(s) in Register	Rd ← Rd • ($FF - K)	Z,N,V	1
INC	Rd	Increment	Rd ← Rd + 1	Z,N,V	1
DEC	Rd	Decrement	Rd ← Rd - 1	Z,N,V	1
TST	Rd	Test for Zero or Minus	Rd ← Rd • Rd	Z,N,V	1
CLR	Rd	Clear Register	Rd ← Rd ⊕ Rd	Z,N,V	1
SER	Rd	Set Register	Rd ← $FF	None	1
BRANCH INSTRUCTIONS					
RJMP	k	Relative Jump	PC ← PC + k + 1	None	2
IJMP		Indirect Jump to (Z)	PC ← Z	None	2
RCALL	k	Relative Subroutine Call	PC ← PC + k + 1	None	3
ICALL		Indirect Call to (Z)	PC ← Z	None	3
RET		Subroutine Return	PC ← STACK	None	4
RETI		Interrupt Return	PC ← STACK	I	4
CPSE	Rd, Rr	Compare, Skip if Equal	if (Rd = Rr) PC ← PC + 2 or 3	None	1/2/3
CP	Rd, Rr	Compare	Rd - Rr	Z,N,V,C,H	1
CPC	Rd, Rr	Compare with Carry	Rd - Rr - C	Z,N,V,C,H	1
CPI	Rd, K	Compare Register with Immediate	Rd - K	Z,N,V,C,H	1
SBRC	Rr, b	Skip if Bit in Register Cleared	if (Rr(b) = 0) PC ← PC + 2 or 3	None	1/2/3
SBRS	Rr, b	Skip if Bit in Register is Set	if (Rr(b) = 1) PC ← PC + 2 or 3	None	1/2/3
SBIC	P, b	Skip if Bit in I/O Register Cleared	if (P(b) = 0) PC ← PC + 2 or 3	None	1/2/3
SBIS	P, b	Skip if Bit in I/O Register is Set	if (P(b) = 1) PC ← PC + 2 or 3	None	1/2/3
BRBS	s, k	Branch if Status Flag Set	if (SREG(s) = 1) then PC ← PC + k + 1	None	1/2
BRBC	s, k	Branch if Status Flag Cleared	if (SREG(s) = 0) then PC ← PC + k + 1	None	1/2
BREQ	k	Branch if Equal	if (Z = 1) then PC ← PC + k + 1	None	1/2
BRNE	k	Branch if Not Equal	if (Z = 0) then PC ← PC + k + 1	None	1/2
BRCS	k	Branch if Carry Set	if (C = 1) then PC ← PC + k + 1	None	1/2
BRCC	k	Branch if Carry Cleared	if (C = 0) then PC ← PC + k + 1	None	1/2
BRSH	k	Branch if Same or Higher	if (C = 0) then PC ← PC + k + 1	None	1/2
BRLO	k	Branch if Lower	if (C = 1) then PC ← PC + k + 1	None	1/2
BRMI	k	Branch if Minus	if (N = 1) then PC ← PC + k + 1	None	1/2
BRPL	k	Branch if Plus	if (N = 0) then PC ← PC + k + 1	None	1/2
BRGE	k	Branch if Greater or Equal, Signed	if (N ⊕ V = 0) then PC ← PC + k + 1	None	1/2
BRLT	k	Branch if Less than Zero, Signed	if (N ⊕ V = 1) then PC ← PC + k + 1	None	1/2
BRHS	k	Branch if Half-carry Flag Set	if (H = 1) then PC ← PC + k + 1	None	1/2
BRHC	k	Branch if Half-carry Flag Cleared	if (H = 0) then PC ← PC + k + 1	None	1/2
BRTS	k	Branch if T-flag Set	if (T = 1) then PC ← PC + k + 1	None	1/2
BRTC	k	Branch if T-flag Cleared	if (T = 0) then PC ← PC + k + 1	None	1/2
BRVS	k	Branch if Overflow Flag is Set	if (V = 1) then PC ← PC + k + 1	None	1/2
BRVC	k	Branch if Overflow Flag is Cleared	if (V = 0) then PC ← PC + k + 1	None	1/2
BRIE	k	Branch if Interrupt Enabled	if (I = 1) then PC ← PC + k + 1	None	1/2
BRID	k	Branch if Interrupt Disabled	if (I = 0) then PC ← PC + k + 1	None	1/2
DATA TRANSFER INSTRUCTIONS					
MOV	Rd, Rr	Move between Registers	Rd ← Rr	None	1
LDI	Rd, K	Load Immediate	Rd ← K	None	1
LD	Rd, X	Load Indirect	Rd ← (X)	None	2
LD	Rd, X+	Load Indirect and Post-inc.	Rd ← (X), X ← X + 1	None	2
LD	Rd, -X	Load Indirect and Pre-dec.	X ← X - 1, Rd ← (X)	None	2

Instruction Set Summary (Continued)

Mnemonic	Operands	Description	Operation	Flags	# Clocks
LD	Rd, Y	Load Indirect	Rd ← (Y)	None	2
LD	Rd, Y+	Load Indirect and Post-inc.	Rd ← (Y), Y ← Y + 1	None	2
LD	Rd, -Y	Load Indirect and Pre-dec.	Y ← Y - 1, Rd ← (Y)	None	2
LDD	Rd,Y+q	Load Indirect with Displacement	Rd ← (Y + q)	None	2
LD	Rd, Z	Load Indirect	Rd ← (Z)	None	2
LD	Rd, Z+	Load Indirect and Post-inc.	Rd ← (Z), Z ← Z + 1	None	2
LD	Rd, -Z	Load Indirect and Pre-dec.	Z ← Z - 1, Rd ← (Z)	None	2
LDD	Rd, Z+q	Load Indirect with Displacement	Rd ← (Z + q)	None	2
LDS	Rd, k	Load Direct from SRAM	Rd ← (k)	None	2
ST	X, Rr	Store Indirect	(X) ← Rr	None	2
ST	X+, Rr	Store Indirect and Post-inc.	(X) ← Rr, X ← X + 1	None	2
ST	-X, Rr	Store Indirect and Pre-dec.	X ← X - 1, (X) ← Rr	None	2
ST	Y, Rr	Store Indirect	(Y) ← Rr	None	2
ST	Y+, Rr	Store Indirect and Post-inc.	(Y) ← Rr, Y ← Y + 1	None	2
ST	-Y, Rr	Store Indirect and Pre-dec.	Y ← Y - 1, (Y) ← Rr	None	2
STD	Y+q, Rr	Store Indirect with Displacement	(Y + q) ← Rr	None	2
ST	Z, Rr	Store Indirect	(Z) ← Rr	None	2
ST	Z+, Rr	Store Indirect and Post-inc.	(Z) ← Rr, Z ← Z + 1	None	2
ST	-Z, Rr	Store Indirect and Pre-dec.	Z ← Z - 1, (Z) ← Rr	None	2
STD	Z+q, Rr	Store Indirect with Displacement	(Z + q) ← Rr	None	2
STS	k, Rr	Store Direct to SRAM	(k) ← Rr	None	2
LPM		Load Program Memory	R0 ← (Z)	None	3
LPM	Rd, Z	Load Program Memory	Rd ← (Z)	None	3
IN	Rd, P	In Port	Rd ← P	None	1
OUT	P, Rr	Out Port	P ← Rr	None	1
PUSH	Rr	Push Register on Stack	STACK ← Rr	None	2
POP	Rd	Pop Register from Stack	Rd ← STACK	None	2
BIT AND BIT-TEST INSTRUCTIONS					
SBI	P, b	Set Bit in I/O Register	I/O(P,b) ← 1	None	2
CBI	P, b	Clear Bit in I/O Register	I/O(P,b) ← 0	None	2
LSL	Rd	Logical Shift Left	Rd(n+1) ← Rd(n), Rd(0) ← 0	Z,C,N,V	1
LSR	Rd	Logical Shift Right	Rd(n) ← Rd(n+1), Rd(7) ← 0	Z,C,N,V	1
ROL	Rd	Rotate Left through Carry	Rd(0) ← C, Rd(n+1) ← Rd(n), C ← Rd(7)	Z,C,N,V	1
ROR	Rd	Rotate Right through Carry	Rd(7) ← C, Rd(n) ← Rd(n+1), C ← Rd(0)	Z,C,N,V	1
ASR	Rd	Arithmetic Shift Right	Rd(n) ← Rd(n+1), n = 0..6	Z,C,N,V	1
SWAP	Rd	Swap Nibbles	Rd(3..0) ← Rd(7..4), Rd(7..4) ← Rd(3..0)	None	1
BSET	s	Flag Set	SREG(s) ← 1	SREG(s)	1
BCLR	s	Flag Clear	SREG(s) ← 0	SREG(s)	1
BST	Rr, b	Bit Store from Register to T	T ← Rr(b)	T	1
BLD	Rd, b	Bit Load from T to Register	Rd(b) ← T	None	1
SEC		Set Carry	C ← 1	C	1
CLC		Clear Carry	C ← 0	C	1
SEN		Set Negative Flag	N ← 1	N	1
CLN		Clear Negative Flag	N ← 0	N	1
SEZ		Set Zero Flag	Z ← 1	Z	1
CLZ		Clear Zero Flag	Z ← 0	Z	1
SEI		Global Interrupt Enable	I ← 1	I	1
CLI		Global Interrupt Disable	I ← 0	I	1
SES		Set Signed Test Flag	S ← 1	S	1
CLS		Clear Signed Test Flag	S ← 0	S	1
SEV		Set Two's Complement Overflow	V ← 1	V	1
CLV		Clear Two's Complement Overflow	V ← 0	V	1
SET		Set T in SREG	T ← 1	T	1
CLT		Clear T in SREG	T ← 0	T	1
SEH		Set Half-carry Flag in SREG	H ← 1	H	1
CLH		Clear Half-carry Flag in SREG	H ← 0	H	1
NOP		No Operation		None	1
SLEEP		Sleep	(see specific descr. for Sleep function)	None	1
WDR		Watchdog Reset	(see specific descr. for WDR/timer)	None	1

Ordering Information[1]

Speed (MHz)	Power Supply	Ordering Code	Package	Operation Range
8	2.7 - 5.5V	ATtiny26L-8PC ATtiny26L-8SC ATtiny26L-8MC	20P3 20S 32M1-A	Commercial (0°C to 70°C)
		ATtiny26L-8PI ATtiny26L-8SI ATtiny26L-8MI	20P3 20S 32M1-A	Industrial (-40°C to 85°C)
16	4.5 - 5.5V	ATtiny26-16PC ATtiny26-16SC ATtiny26-16MC	20P3 20S 32M1-A	Commercial (0°C to 70°C)
		ATtiny26-16PI ATtiny26-16SI ATtiny26-16MI	20P3 20S 32M1-A	Industrial (-40°C to 85°C)

Note: 1. This device can also be supplied in wafer form. Please contact your local Atmel sales office for detailed ordering information and minimum quantities.

Package Type	
20P3	20-lead, 0.300" Wide, Plastic Dual Inline Package (PDIP)
20S	20-lead, 0.300" Wide, Plastic Gull Wing Small Outline (SOIC)
32M1-A	32-pad, 5 x 5 x 1.0 body, Lead Pitch 0.50 mm Micro Lead Frame Package (MLF)

Packaging Information

20P3

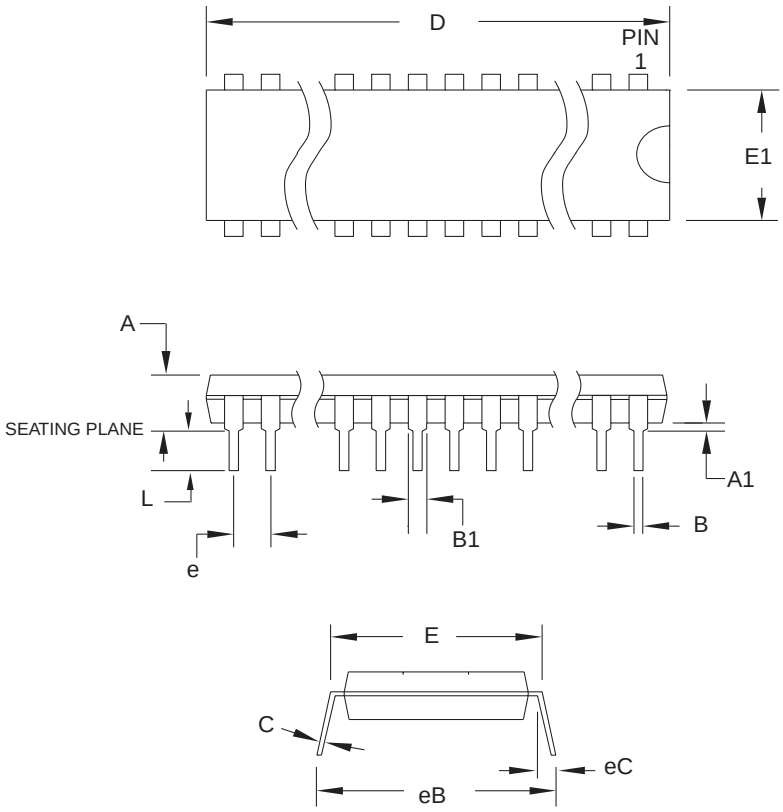

COMMON DIMENSIONS
(Unit of Measure = mm)

SYMBOL	MIN	NOM	MAX	NOTE
A	–	–	5.334	
A1	0.381	–	–	
D	25.984	–	25.493	Note 2
E	7.620	–	8.255	
E1	6.096	–	7.112	Note 2
B	0.356	–	0.559	
B1	1.270	–	1.551	
L	2.921	–	3.810	
C	0.203	–	0.356	
eB	–	–	10.922	
eC	0.000	–	1.524	
e	2.540 TYP			

Notes:
1. This package conforms to JEDEC reference MS-001, Variation AD.
2. Dimensions D and E1 do not include mold Flash or Protrusion. Mold Flash or Protrusion shall not exceed 0.25 mm (0.010").

09/28/01

	TITLE	DRAWING NO.	REV.
2325 Orchard Parkway San Jose, CA 95131	**20P3**, 20-lead (0.300"/7.62 mm Wide) Plastic Dual Inline Package (PDIP)	20P3	B

20S

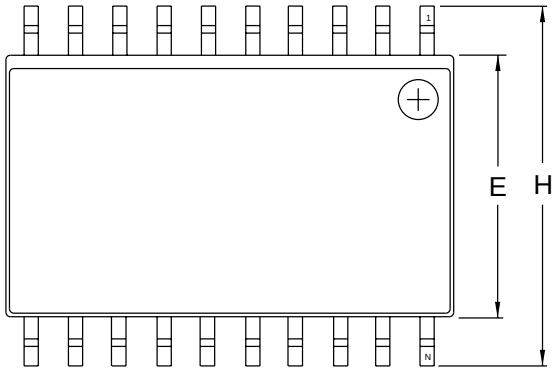

Top View

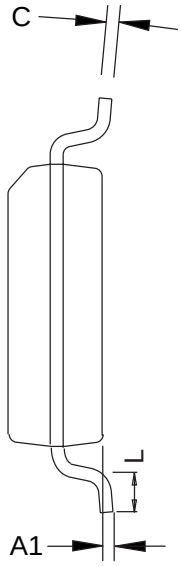

End View

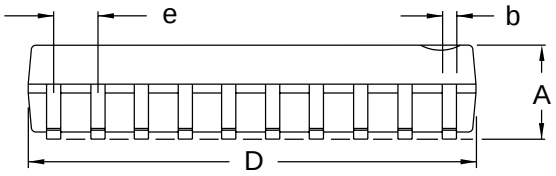

Side View

COMMON DIMENSIONS
(Unit of Measure = inches)

SYMBOL	MIN	NOM	MAX	NOTE
A	0.0926		0.1043	
A1	0.0040		0.0118	
b	0.0130		0.0200	4
C	0.0091		0.0125	
D	0.4961		0.5118	1
E	0.2914		0.2992	2
H	0.3940		0.4190	
L	0.0160		0.050	3
e	0.050 BSC			

Notes:
1. This drawing is for general information only; refer to JEDEC Drawing MS-013, Variation AC for additional information.
2. Dimension "D" does not include mold Flash, protrusions or gate burrs. Mold Flash, protrusions and gate burrs shall not exceed 0.15 mm (0.006") per side.
3. Dimension "E" does not include inter-lead Flash or protrusion. Inter-lead Flash and protrusions shall not exceed 0.25 mm (0.010") per side.
4. "L" is the length of the terminal for soldering to a substrate.
5. The lead width "b", as measured 0.36 mm (0.014") or greater above the seating plane, shall not exceed a maximum value of 0.61 mm (0.024") per side.

1/9/02

2325 Orchard Parkway San Jose, CA 95131	**TITLE** **20S2**, 20-lead, 0.300" Wide Body, Plastic Gull Wing Small Outline Package (SOIC)	**DRAWING NO.** 20S2	**REV.** A

32M1-A

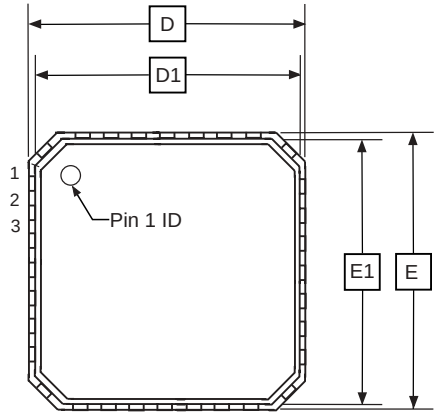

TOP VIEW

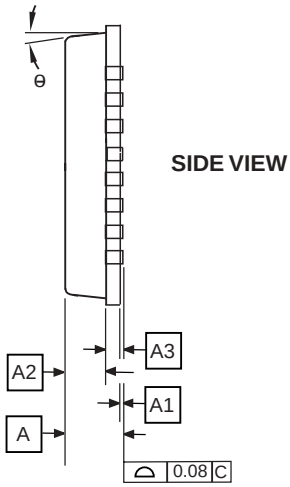

SIDE VIEW

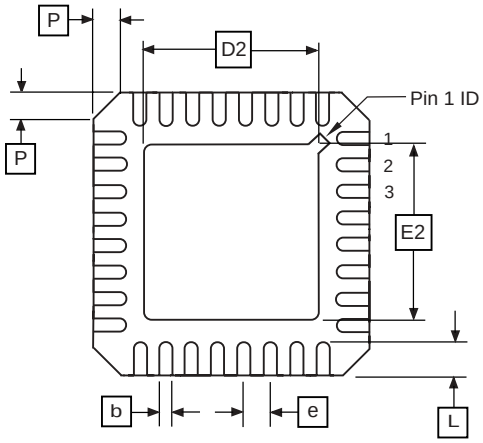

BOTTOM VIEW

COMMON DIMENSIONS
(Unit of Measure = mm)

SYMBOL	MIN	NOM	MAX	NOTE
A	0.80	0.90	1.00	
A1	–	0.02	0.05	
A2	–	0.65	1.00	
A3		0.20 REF		
b	0.18	0.23	0.30	
D		5.00 BSC		
D1		4.75 BSC		
D2	2.95	3.10	3.25	
E		5.00 BSC		
E1		4.75BSC		
E2	2.95	3.10	3.25	
e		0.50 BSC		
L	0.30	0.40	0.50	
P	–	–	0.60	
θ	–	–	12°	

Notes: 1. JEDEC Standard MO-220, Fig. 2 (Anvil Singulation), VHHD-2.

01/15/03

	TITLE	DRAWING NO.	REV.
ATMEL 2325 Orchard Parkway San Jose, CA 95131	**32M1-A**, 32-pad, 5 x 5 x 1.0 mm Body, Lead Pitch 0.50 mm Micro Lead Frame Package (MLF)	32M1-A	C

Datasheet Change Log for ATtiny26

Please note that the referring page numbers in this section are referred to this document. The referring revision in this section are referring to the document revision.

Changes from Rev. 1477D-05/03 to Rev. 1477E-10/03

1. **Removed Preliminary references.**
2. **Updated "Features" on page 1.**
3. **Removed SSOP package reference from "Pin Configuration" on page 2.**
4. **Updated V_{RST} and t_{RST} in Table 3 on page 22.**
5. **Updated "Calibrated Internal RC Oscillator" on page 31.**
6. **Updated DC Charcteristics for V_{OL}, I_{IL}, I_{IH}, I_{CC} Power Down and V_{ACIO} in "Electrical Characteristics" on page 125.**
7. **Updated V_{INT}, INL and Gain Error in "ADC Characteristics" on page 128 and page 129. Fixed typo in "Absolute Accuracy" on page 129.**
8. **Added Figure 106 in "Pin Driver Strength" on page 145, Figure 120, Figure 121 and Figure 122 in "BOD Thresholds and Analog Comparator Offset" on page 154. Updated Figure 117 and Figure 118.**
9. **Removed LPM Rd, Z+ from "Instruction Set Summary" on page 169. This instruction is not supported in ATtiny26.**

Changes from Rev. 1477C-09/02 to Rev. 1477D-05/03

1. **Updated "Packaging Information" on page 172.**
2. **Removed ADHSM from "ADC Characteristics" on page 128.**
3. **Added section "EEPROM Write During Power-down Sleep Mode" on page 62.**
4. **Added section "Default Clock Source" on page 28.**
5. **Corrected PLL Lock value in the "Bit 0 – PLOCK: PLL Lock Detector" on page 54.**
6. **Added information about conversion time when selecting differential channels on page 80.**
7. **Corrected {DDxn, PORTxn} value on page 92.**
8. **Added section "Unconnected Pins" on page 95.**
9. **Added note for RSTDISBL Fuse in Table 49 on page 107.**
10. **Corrected DATA value in Figure 61 on page 115.**
11. **Added WD_FUSE period in Table 59 on page 122.**
12. **Updated "ADC Characteristics" on page 128 and added Table 64, "ADC Characteristics, Differential Channels, TA = -40×C to 85×C," on page 129.**

13. Updated “ATtiny26 Typical Characteristics” on page 130.

14. Added LPM Rd, Z and LPM Rd, Z+ in “Instruction Set Summary” on page 169.

Changes from Rev. 1477B-04/02 to Rev. 1477C-09/02

1. Changed the Endurance on the Flash to 10,000 Write/Erase Cycles.

Changes from Rev. 1477A-03/02 to Rev. 1477B-04/02

1. Removed all references to Power Save sleep mode in the section “System Clock and Clock Options” on page 25.

2. Updated the section “Analog to Digital Converter” on page 77 with more details on how to read the conversion result for both differential and single-ended conversion.

3. Updated “Ordering Information(1)” on page 171 and added MLF package information.

Table of Contents

Features ***1***

Pin Configuration ***2***

Description ***3***
- Block Diagram 4
- Pin Descriptions 5

Architectural Overview ***6***
- General Purpose Register File 7
- ALU – Arithmetic Logic Unit 8
- In-System Programmable Flash Program Memory 9
- SRAM Data Memory 9
- Program and Data Addressing Modes 10
- EEPROM Data Memory 14

Memory Access Times and Instruction Execution Timing ***15***

I/O Memory ***17***
- Stack Pointer – SP 19
- Reset and Interrupt Handling 20

System Clock and Clock Options ***25***
- Clock Systems and their Distribution 25
- Clock Sources 27
- Default Clock Source 28
- Crystal Oscillator 28
- Low-frequency Crystal Oscillator 29
- External RC Oscillator 30
- Calibrated Internal RC Oscillator 31
- External Clock 32

Power Management and Sleep Modes ***41***
- Minimizing Power Consumption 43

Timer/Counters ***44***
- Timer/Counter0 Prescaler 44
- Timer/Counter1 Prescaler 45
- 8-bit Timer/Counter0 45
- 8-bit Timer/Counter1 47

Watchdog Timer ***58***

EEPROM Read/Write Access ***60***
- Preventing EEPROM Corruption 62

Universal Serial Interface – USI **63**
Overview 63
Register Descriptions 64
Functional Descriptions 68
Alternative USI Usage 73

Analog Comparator **74**

Analog to Digital Converter **77**
Features 77
Operation 78
Prescaling and Conversion Timing 79
ADC Noise Canceler Function 82
ADC Conversion Result 82
Scanning Multiple Channels 88
ADC Noise Canceling Techniques 88
Offset Compensation Schemes 88

I/O Ports **90**
Introduction 90
Ports as General Digital I/O 91
Alternate Port Functions 95
Register Description for I/O Ports 105

Memory Programming **106**
Program and Data Memory Lock Bits 106
Fuse Bits 107
Signature Bytes 108
Calibration Byte 108
Parallel Programming Parameters, Pin Mapping, and Commands 108
Parallel Programming 111
Serial Downloading 120
Serial Programming Pin Mapping 120

Electrical Characteristics **125**
Absolute Maximum Ratings* 125
External Clock Drive Waveforms 127
External Clock Drive 127
ADC Characteristics 128

ATtiny26 Typical Characteristics **130**

..... **167**

Register Summary **168**

Instruction Set Summary ***169***

Ordering Information(1) ***171***

Packaging Information ***172***

20P3 172
20S 173
32M1-A 174

Datasheet Change Log for ATtiny26 ..... ***175***

Changes from Rev. 1477D-05/03 to Rev. 1477E-10/03 175
Changes from Rev. 1477C-09/02 to Rev. 1477D-05/03 175
Changes from Rev. 1477B-04/02 to Rev. 1477C-09/02 176
Changes from Rev. 1477A-03/02 to Rev. 1477B-04/02 176

Table of Contents ..... ***i***

Atmel Corporation

2325 Orchard Parkway
San Jose, CA 95131
Tel: 1(408) 441-0311
Fax: 1(408) 487-2600

Regional Headquarters

Europe
Atmel Sarl
Route des Arsenaux 41
Case Postale 80
CH-1705 Fribourg
Switzerland
Tel: (41) 26-426-5555
Fax: (41) 26-426-5500

Asia
Room 1219
Chinachem Golden Plaza
77 Mody Road Tsimshatsui
East Kowloon
Hong Kong
Tel: (852) 2721-9778
Fax: (852) 2722-1369

Japan
9F, Tonetsu Shinkawa Bldg.
1-24-8 Shinkawa
Chuo-ku, Tokyo 104-0033
Japan
Tel: (81) 3-3523-3551
Fax: (81) 3-3523-7581

Atmel Operations

Memory
2325 Orchard Parkway
San Jose, CA 95131
Tel: 1(408) 441-0311
Fax: 1(408) 436-4314

Microcontrollers
2325 Orchard Parkway
San Jose, CA 95131
Tel: 1(408) 441-0311
Fax: 1(408) 436-4314

La Chantrerie
BP 70602
44306 Nantes Cedex 3, France
Tel: (33) 2-40-18-18-18
Fax: (33) 2-40-18-19-60

ASIC/ASSP/Smart Cards
Zone Industrielle
13106 Rousset Cedex, France
Tel: (33) 4-42-53-60-00
Fax: (33) 4-42-53-60-01

1150 East Cheyenne Mtn. Blvd.
Colorado Springs, CO 80906
Tel: 1(719) 576-3300
Fax: 1(719) 540-1759

Scottish Enterprise Technology Park
Maxwell Building
East Kilbride G75 0QR, Scotland
Tel: (44) 1355-803-000
Fax: (44) 1355-242-743

RF/Automotive
Theresienstrasse 2
Postfach 3535
74025 Heilbronn, Germany
Tel: (49) 71-31-67-0
Fax: (49) 71-31-67-2340

1150 East Cheyenne Mtn. Blvd.
Colorado Springs, CO 80906
Tel: 1(719) 576-3300
Fax: 1(719) 540-1759

Biometrics/Imaging/Hi-Rel MPU/ High Speed Converters/RF Datacom
Avenue de Rochepleine
BP 123
38521 Saint-Egreve Cedex, France
Tel: (33) 4-76-58-30-00
Fax: (33) 4-76-58-34-80

e-mail
literature@atmel.com

Web Site
http://www.atmel.com

Disclaimer: Atmel Corporation makes no warranty for the use of its products, other than those expressly contained in the Company's standard warranty which is detailed in Atmel's Terms and Conditions located on the Company's web site. The Company assumes no responsibility for any errors which may appear in this document, reserves the right to change devices or specifications detailed herein at any time without notice, and does not make any commitment to update the information contained herein. No licenses to patents or other intellectual property of Atmel are granted by the Company in connection with the sale of Atmel products, expressly or by implication. Atmel's products are not authorized for use as critical components in life support devices or systems.

© Atmel Corporation 2003. **All rights reserved.** Atmel® and combinations thereof, AVR® and AVR Studio® are the registered trademarks of Atmel Corporation or its subsidiaries.

Other terms and product names may be the trademarks of others.

Printed on recycled paper.

1477E–AVR–12/03 0M